ADDENDUM 01

Keyo Electrical Service Upgrade
University of Maine

Date: February 3, 2026

To: Prospective Bidders

From: University of Maine System
5765 Service Building
Orono, ME 04469-5765

This Addendum forms a part of the Contract Documents and modifies the original Bid Documents and Specifications dated January 8, 2026. Portions of the bid and contract documents not altered by this Addendum remain in full force.

Acknowledge receipt of this Addendum in the space provided on the Bid Form. Failure to do so may subject the Bidder to disqualification.

The due date for submission of bids remains unchanged from the initial Request for Bid.

This Addendum consists of the following:

- *Questions with Response*
- *Specification Changes*
- *Drawing Changes*
- *Non-Mandatory Pre-Bid Attendance List*

ADDENDUM

Date February 3, 2026

To Prospective Bidders

Re Addendum No. 1 to the Construction Documents for:

University of Maine
Keyo Building Electrical Service Upgrade
Orono, Maine
Project No. 24265

This Addendum forms a part of the Contract Documents and modifies the original Construction Documents dated January 5, 2026. Acknowledge receipt of this Addendum in the space provided in the Bid Form.

This Addendum consists of five pages, Pre Bid Meeting Sign in Sheet, Pre-Bid Meeting Minutes, Topographic Survey, Specification Sections 00 01 10, 00 02 00a, 00 02 00c, 00 02 00d, 00 41 13, 01 23 00, 26 00 10, 26 24 13, and Drawings listed on page five.

Harriman

Daniel Backman , AIA
Principal

INFORMATION AVAILABLE TO BIDDERS

1. Pre Bid Meeting Sign-in Sheet dated 01-15-2026.
2. Pre-Bid Meeting Minutes dated 01-15-2026.
3. Topographic Survey of Keyo Building – Provided by Plisga & Day Land Surveyors dated February 6, 2025.

QUESTIONS AND ANSWERS

Q1. What size are the primary conductors feeding the new owner supplied switchgear and transformer?

A1. 350kcmil Copper with Full Size Neutral has been noted on drawing E50-1 as a part of this Addendum.

Q2. Can you provide more information on NLAD1? Does it have a meter on it?

A2. NLAD1 is a 400A disconnect. It does not have a meter. The meter will be located in the new panel NHA1. See specifications for meter details and type. Clarification has been included on the riser diagram E50-1.

Q3. E20-0 shows NLAD1 being 400A, whereas the one-line diagram on E50-1 omits the amperage value and shows it being fed with "1200Y" from T-NLAD1. Please confirm what amperage NLAD1 is.

A3. NLAD1 shall be rated 40A. The wire size feeding NLAD1 will be updated to 400Y on the riser diagram E50-1.

Q4. Deduct alternate on C40-1 and drawing E80-1 requests that conductors be pulled in the new 4" conduit from EHH-3 to the new switch pad. What conductors are to be pulled in this conduit? Additionally, this conduit is tagged as "NUC" for communications, but it appears to terminate at the switch pad. Please clarify the correct point of termination for this conduit. Also, please confirm whether this conduit can be PVC or if it will need to be RTRC.

A4. Communications conduit may utilize PVC. Termination location on the drawing is correct, and provides communications connection from the switch pad for monitoring from a central campus location. Fiber optic cable to be provided in accordance with Div 27 specifications included with bid package.

Q5. Manholes EMH-3-K3 and EMH-3-K1 are shown on E80-1. Conversely, these manholes are not shown on C40-1. Are manholes EMH-3-K3 and EMH-3-K1 being used in this project? The new electrical manholes on drawings C40-1 and E80-1 appear to have conflicting locations. The electrical conduits also appear to conflict between the two drawings. Please confirm quantity and locations of manholes and conduits.

A5. Manhole labels to be added to C40-1 drawing to match E80-1 drawing. Locations of manholes and underground conduits on drawings has been adjusted to ensure exact location matching as a part of this Addendum.

Q6. Drawing E80-1 shows two 5" conduits exiting the switch pad and terminating in a grassy area in the direction of the Keyo building. Please confirm if these conduits are required.

A6. Yes, the conduits are required and shall terminate in manhole EMH-3-K1. See updated plan issued with this Addendum.

Q7. Keynote P01 on drawing E20-0 states the EC shall route conduits for the Food Innovation Lab project through the boiler (furnace) room. Please confirm quantity of conduits and size of conduits. Will the conduits for this project need to penetrate the foundation or will the Food Innovation project bring their conduits into the boiler room for continuation by the Keyo project?

A7. Two 4" conduits for 800-amp service shall be required. Conduits shall be routed through the boiler room and extend 5-feet beyond foundation wall for tie in as a part of the food innovation addition project. Drawing E20-0 has been updated as a part of this Addendum to clarify requirements.

Q8. E80-1 shows (3) – 4” secondary conduits run from the exterior pad mount transformer to NHA-1. Conversely, C40-1 shows (4) – 4” secondary conduits run from the exterior pad mount transformer to NHA-1. Of these (4) conduits, (3) are utilized and (1) is spare. Can you please confirm the quantity of secondary conduits run from the exterior pad mount transformer to NHA-1? How many are utilized? How many, if any, are spares?

A8. Provide 4-4"conduits with 3sets of 600kcmil-4"C with one spare conduit. Electrical drawings E50-1 and E20-0 have been updated to reflect this as a part of this Addendum.

Q9. Spec 260010-1.04-B states that a temporary electrical service shall be provided by the EC. Can you please confirm if a temporary electrical service is needed for this project?

A9. Due to the down time necessary for removing the existing transformer and connecting to the new transformer, a Univeristy provided generator will provide temporay service to the existing building. This is noted on sheet E20-0 and specification has been updated to reflect this condition. Any other temporary service required by and for the contractor's work is the responsibility of the contractor.

Q10. Who provides the relay cabinet attached to the exterior pad mount medium voltage switch as shown on E50-1?

A10. The relay cabinet shall be furnished with the Owner furnished medium voltage switch. See attached shop drawing provided as a part of this Addendum.

Q11. Specification 260500-3.05, 3.06, and 3.07 require quite a bit of testing. Will all of these tests be required as specified?

A11. Yes. All tests noted shall be required.

Q12. Specification 260513-3.02 references multiple testing requirements, some of which aren’t typically recommended by the testing agencies or required by the University (specifically DC High Potential testing and Dissipation Factor Testing). Please confirm if these testing requirements will be required as part of the project or if they will be provided by others. If they are to be part of the project, please confirm which tests will be required.

A12. Yes. All tests noted shall be required.

Q13. Specification 261219-3.05 and 3.06 require quite a bit of testing. Will all these tests be required as specified?

A13. Yes. All tests noted shall be required.

Q14. Specification 262413-1.06-B requires a portable test set and a spare fuse cabinet for the switchboard. Please confirm if these will be required.

A14. No. These requirements have been removed from the specification as a part of this Addendum.

Q15. Specification 262413-3.5-A requires factory testing after installation of the switchboard. Please confirm if this will be required.

A15. Yes. All tests noted shall be required.

Q16. Will the testing and inspection requirements in Specification 262413-3.05-B be required?

A16. Yes. All tests noted shall be required.

Q17. Would a panelboard be acceptable in lieu of the specified switchboard for NHA1, providing it meets the design intent?

A17. Yes, provided that the submitted Panel fits in the existing space and meets all egress requirements and code clearance requirements.

Q18. Specification 260543-3.03-B.4 requires expansion and deflection fittings where ducts enter manholes. Please confirm if these will be required for this project.

A18. Yes, fittings will be required in locations noted in specification.

Q19. Can you provide more detail on the existing primary cable we will be splicing into (size, copper or aluminum, etc.)

A19. The University's one-line diagram shows the existing primary cable is expected to be 350 MCM Kaiser Alum EXLP Copper cable rated 5kV with copper tape shield. Cable Y noted on the Riser Diagram E50-2 at A23 Keyo Building is expected to by #4 Copper Cable Raited 5kV as well. However, the contractor is responsible for verifying the exact cable type within the existing vault.

CHANGES TO SPECIFICATIONS

1. SECTION 00 01 10-TABLE OF CONTENTS
   a. Revised and reissued with this Addendum.

2. SECTION 00 02 00a – INFORMATION AVAILABLE TO BIDDERS
   a. Revised and reissued with this Addendum.

3. SECTION 00 02 00c – SWITCHGEAR CUTSHEETS
   a. Issued with this Addendum.

4. SECTION 00 02 00d – S.W. COLE -EXPLORATION AND GEOTECHNICAL ENGINEERING SERVICES REPORT DATED JANUARY 21, 2025
   a. Issued with this Addendum.

5. SECTION 00 41 13 – BID FORM – SHORT FORM
   a. Issued with this Addendum.

6. SECTION 01 23 00 – ALTERNATES
   a. Revised and reissued with this Addendum.

7. SECTION 26 00 10 – SUPPLEMENTAL REQUIREMENTS FOR ELECTRICAL
   a. Revised and reissued with this Addendum.

8. SECTION 26 24 13 – SWITCHBOARDS
   a. Revised and reissued with this Addendum.

DRAWINGS REVISED AND REISSUED WITH THIS ADDENDUM, DATED 02-03-2026:

1. DRAWING C40-1 – SITE UTILITY PLAN
2. DRAWING E20-0 – BASEMENT FLOOR PLAN POWER AND SYSTEMS
3. DRAWING E50-1 – DIAGRAMS
4. DRAWING E80-1 – SITE PLAN

Maine's Public Universities
UNIVERSITY OF MAINE SYSTEM

SIGN-IN SHEET

Project Number:	5100722	Date/Location:	01/15/2026 | Service Bldg – Room 109
Project Name:	Keyo Electrical Service Upgrade	Meeting:	Pre-Bid Meeting

Name	Company, Title	Phone	Email
Sarah Cline	UMS CPPM, Project Mana	727-2096	Sarah.cline@maine.edu
Marcus Dotten	Dotten's construction	207-800-5783	Jackson@dotens.com
Nick DeFrancott	Maine Earth	207-862-4360	ndefrancott@maineearth.com
Ken Moulison	Moulison Electric	207-468-2115	KenMoulisonAssociates.com
Lucas Vanadestine	SMC	(207)745-4759	lvanadestine@smcinc.net
Andy Rhodes	ABM Mechanical	(207)944-0749	arhodes@abmmechanical.com
Bob Gray	CEM, PM	207 322-4658	Bob@CEMaine.com
Cameron Lynch	C+C Lynch	207-632-7159	Cameron@cclynchelec.com

Pre-Bid Meeting Minutes

Project Name:	UM Keyo Electrical Service Upgrade	Date:	01/15/2026
Project Number:	5100722	UMS Project Manager:	Sarah Cline
Bid Number:	CPPM2026-008	Design Professional:	Harriman
Meeting Place:	Service Building Conference Room 109	Meeting Time:	10:00 AM
Attendees:	Sign-In Sheet Attached Separately		

1. Introduction
    a. UM Personnel:
        i. Sarah Cline – CPPM Project Manager (Primary Contact)
    b. Design Professional:
        i. Daniel Backman – Harriman PM (Not Present)
        ii. Chelsea Hadsel – Harriman PM (Not Present)

2. Project Overview:
    a. Project Description:
    b. Project Documents:
        i. Drawings
        ii. Specifications
        iii. Geotech Report – to be provided in future Addenda
        iv. Topo Map – to be provided in future Addenda
    c. Project Timeline:
        i. Substantial Completion: Thursday, 10/01/2026*
            1. Date that permanent power is made available to Keyo and Food Innovation
        ii. Final Completion: Friday, 1/29/2027*
            1. Date that all work is complete.

3. Bid Information
    a. Bid Date, Time: Thursday, 2/12/2026, 2:00 PM – bid opening via Zoom
    b. Questions Due: Monday, 1/26/2026, 2:00 PM – must be submitted in writing to the cppmquestiosn@maine.edu
    c. Response to Questions Due: Tuesday, 2/3/2026, 2:00 PM – in form of Addendum

4. Bid Proposal Form:
    a. Base Bid – Complete Drawings and Specifications
    b. Alternates:
        i. 01 – Credit for the materials and labor to pull new cable for underground communications This is for the cabling only. The communications conduit will remain in the base scope.
    c. Allowances: None
    d. Unit Prices:
        i. Removal of Unsatisfactory Soil and Replacement with Satisfactory Soil Material (15 cy)
        ii. Mass rock excavation and replacement with satisfactory soil material (10 cy)
        iii. Trench rock excavation and replacement satisfactory soil material (5 cy)
    e. Liquidated Damages: Refer to 00 73 00.11 for schedule of liquidated damages

5. Special Conditions & Work Requirements

a. University Contractors:
    i. None Anticipated. All work to be performed by the awarded contractor
b. Preconstruction Submittals:
    i. Site-Specific Safety Plan
    ii. Site Logistics Plan
    iii. Quality Control Plan
c. 3rd Party Testing and Inspection – the Contractor will be responsible for procuring the 3rd Party Testing and Inspection Agency.
d. Commissioning Agent – the Contractor will be responsible for procuring the Commissioning Agent
e. Telecommunications – Contractor will be responsible for performing the telecommunications work
f. Permits – Contractor is responsible for obtaining all trade specific permits
g. Transformer and Switch – The University has already purchased the transformer and switchgear. The transformer is on track to be delivered in May2026, and the shop drawings have been included in the bid documents. The switchgear is still undergoing shop drawing review, but shop drawings will be made available to the contractor(s) once approved by the designer. The intent is for the transformer to be installed and connected with temporary buses until the switchgear is delivered.
h. Temporary Utilities – UM will provide the generator for the temporary power requirements while new feeders are pulled and connected. The generator can only run for 30-consecutive days, so any work requiring the temp power must be completed within this timeframe. Contractor will be responsible for providing any other temporary power needed to complete their work.

6. Keyo Food Innovation
    a. A new 3,750 SF Food Innovation building will be constructed concurrently with the Keyo Service Electrical Upgrade. The permanent electrical service must be complete prior to 10/1/2026 to support the new Food Innovation project commissioning and startup. Contractor is responsible for coordinating and communication with the Food Innovation Contractor to ensure there is no conflict in work and ensure that the project schedule is maintained.

7. Campus Electrical Upgrades – South Electrical Loop and PDC
    a. The University is in the process of upgrading the campus electrical infrastructure, including a new substation, under a separate contract. As part of the campus upgrades, a new power distribution center (PDC) will be installed adjacent to the existing substation.
    b. Manholes – Manholes EMH-3-1, EMH-3-3, and EHH-3 are provided under a separate contract. Contractor will be responsible for splicing into the designated manholes as shown on the contract drawings. Contractor will be responsible for coordinating splicing schedule and manhole locations with the South Electrical Loop/PDC contractor.
    c. New Cable Runs – Contractor shall coordinate with the South Electrical Loop Contractor when coring into and splicing within EMH-3-1 and EHH-3.
    d. Commissioning – Contractor shall ensure commissioning of electrical equipment is coordinated with the commissioning of the PDC.

8. Access to Site during Bidding Phase

9. Site Visit by Attendees, Owner, and Design Professional(s)

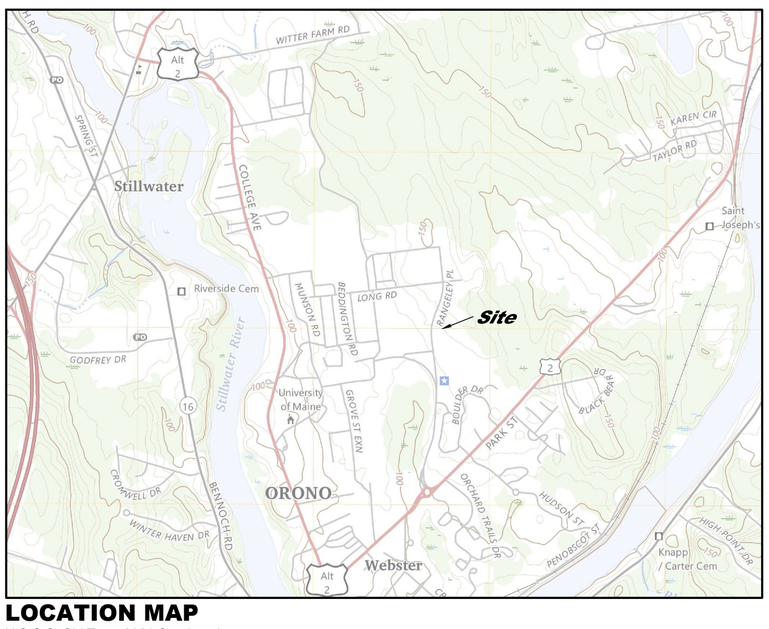

LOCATION MAP

U.S.G.S. Old Town 2024 Quadrangle
Scale: 1"=2,000'

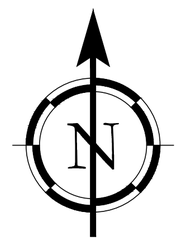

Grid North
See Note 2

NOTES

1. Plan/Drawing References:
A. "Campus Plan 2022-02-09" drawing file provided by the University of Maine.

2. Basis of Bearings:
Bearings shown on this plan are based on Grid North of the Maine State Plane Coordinate System, East Zone, NAD83(2011) based on GPS observations. This survey is tied to other recent work performed for the ASCC-GEM-Belgrade Road/Spur Triangle Areas.

3. Utility Information:
The location shown on this plan for above and underground utilities, including water, electricity, telephone, sewer, and storm drains are approximate and should be verified before any excavation. Federal and State Laws require anyone performing any sort of excavation, including digging, boring, backfilling or grading to notify "DIG SAFE", (1-888-344-7233), at least 72 hours before they begin work.
The underground utilities shown have been located from field survey information, utility markings on the ground, and from the campus plan referenced in Note 1A. Linetypes shown with the suffix "-CP" were taken from the campus plan. Plisga & Day, Land Surveyors (P&D) makes no guarantee that the underground utilities shown comprise all such utilities in the area, either in service or abandoned. P&D further does not warrant that the underground utilities are in the exact location indicated, although P&D does certify that they are located as accurately as possible from information available. P&D has not physically located the underground utilities.

4. Elevations and contours shown on this plan refer to NAVD88 (Geoid18), based on GPS observations. The contour interval is 1'.

5. Information shown from "Campus Plan referenced in Note 1A" is an XREF to the drawing on layer "XREF-CampusPlan". That information has been aligned to the drawing using building corners as located during this survey and **the alignment, completeness, and scale should be considered approximate only**. No information regarding the origin of the data found within "Campus Plan" was provided and it is, accordingly, of unknown accuracy or quality. Plisga & Day recommends anyone using this information to review the original "Campus Plan.DWG" available from the University of Maine.

6. This plan does not represent a boundary survey. No report was prepared. No monuments were set. No legal description was prepared.

7. Field work was completed on January 8, 2025 and February 5, 2025. This survey was taken under ice and snow conditions. Some surface features may not be shown due to the conditions at the time of the survey.

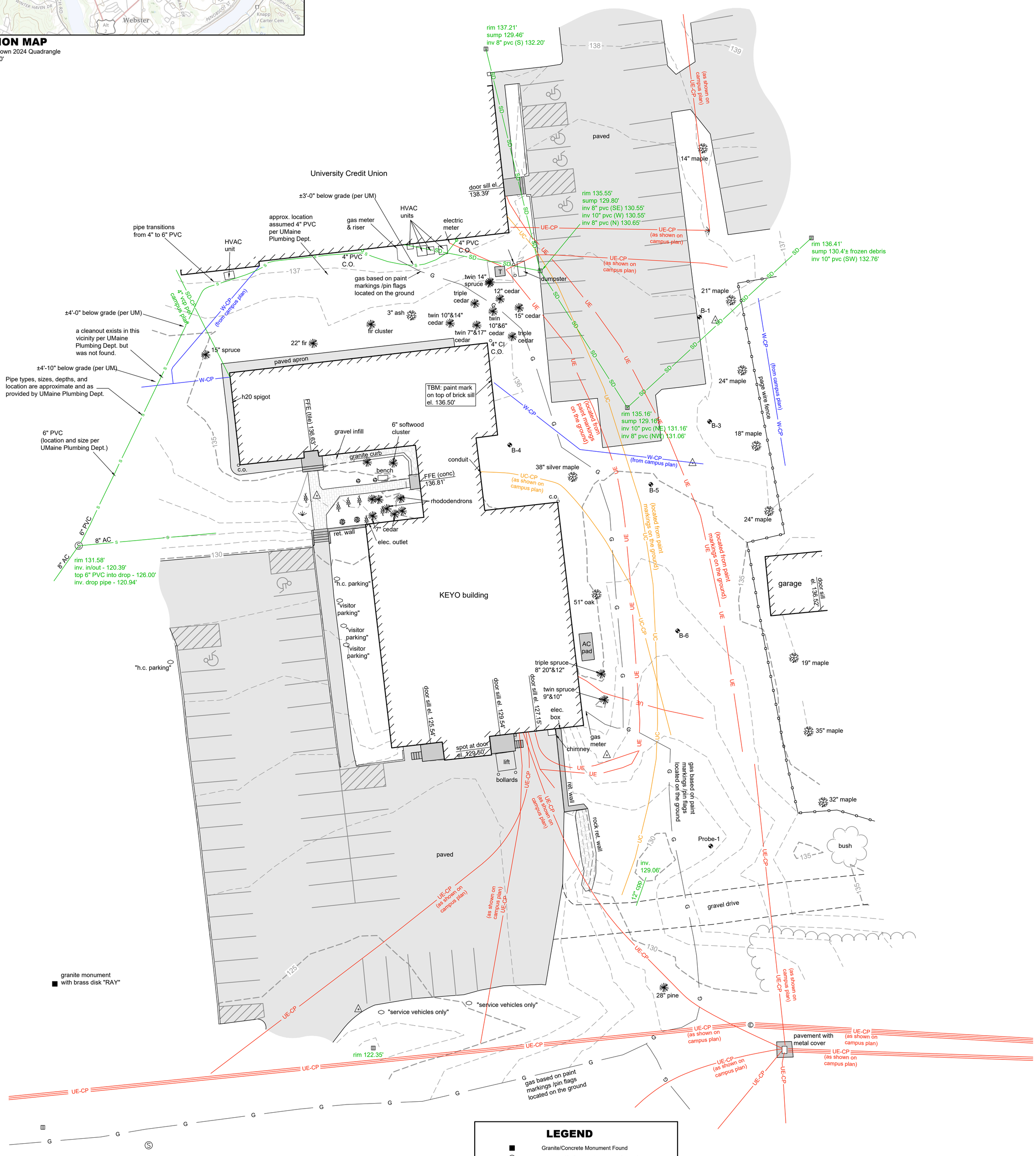

LEGEND

- Granite/Concrete Monument Found
- Manhole (S=Sewer, D=Drain,T=Comm.)
- Catch Basin
- Hydrant
- Water Valve
- Water Shut-Off
- Gas Valve
- Utility Pole
- Guy Anchor
- Sign
- Tree (hardwood/softwood)
- Light (Pole/Ground)
- Rock
- Edge of Pavement
- Concrete Pad
- Edge of Gravel
- SS — Sanitary Sewer
- OHW — Overhead Utilities
- UEC — Underground Elec./Comm. Utilities
- UEC-CP — Underground Elec./Comm. Utilities from Campus Plan
- W — Water Line
- W-CP — Water Line from Campus Plan
- SD — Storm Drain
- SD-CP — Storm Drain from Campus Plan
- G — Gas Line
- Treeline
- Fence

0' 20' 40'
GRAPHIC SCALE (1"=20')

PLISGA & DAY
LAND SURVEYORS
72 MAIN STREET
BANGOR, MAINE
DATE: February 6, 2025*
PROJ. NO. 24307
Email: info@WeMapIt.com
Phone: (207) 947-0019
Toll-Free: 1-800-734-0019
DRAWING FILE: 24307.dwg
www.WeMapIt.com

*Rev. 10-28-2025 to show cleanouts, sewer line, HVAC units on south side of Credit Union building.
*Rev. 11-05-2025 to show changes in sewer on Southwest side of Credit Union based on new information provided by UM.

STATE OF MAINE
STEVENSON W. SHEPPARD
2086
PROFESSIONAL LAND SURVEYOR

CERTIFICATION

PLISGA & DAY Land Surveyors, hereby certifies to The University of Maine, exclusively, that to the best of our knowledge and belief this survey conforms to Standards of Practice adopted by the Maine Board of Licensure for Professional Land Surveyors, except as stated in Note 6.

PLISGA & DAY LAND SURVEYORS

Date: February 6, 2025*
Stevenson W. Sheppard
Maine Professional Land Surveyor No. 2086

Topographic Survey

of

KEYO Building

Rangeley Road, Orono, Maine
Prepared for
The University of Maine
5765 Service Building
Orono, Maine 04469-5765

UNIVERSITY OF MAINE
KEYO BUILDING
ELECTRICAL SERVICE UPGRADE

TABLE OF CONTENTS

DIVISION 00 – PROCUREMENT AND CONTRACTING REQUIREMENTS
00 01 01 - Project Title Page
00 01 07 - Seals Page
00 01 10 - Table of Contents
00 01 15 - List of Drawing Sheets
00 02 00 – Information Available to Bidders
00 02 00b- Transformer Cut Sheets
00 02 00c - Switchgear Cut Sheets
00 02 00d - S.W. Cole - Exploration and Geotechnical Engineering Services Report dated January 21,2025
00 41 13 - Bid Form – Short Form

DIVISION 01 - GENERAL REQUIREMENTS
01 10 00 - Summary of Work
01 14 00 - Work Restrictions
01 22 00 - Unit Prices
01 23 00 - Alternates
01 26 00 - Contract Modification Procedures
01 29 00 - Payment Procedures
01 31 00 - Project Management and Coordination
01 32 00 - Construction Progress Documentation
01 33 00 - Submittal Procedures
Electronic Document Release Agreement
01 40 00 - Quality Requirements
01 42 00 - References
01 50 00 - Temporary Facilities and Controls
01 60 00 – Product Requirements
01 63 00 - Substitutions and Product Options
01 73 29 - Cutting and Patching
01 74 19 - Construction Waste Management and Disposal
01 77 00 - Closeout Procedures
01 78 23 - Operations and Maintenance Data
01 78 39 - Project Record Documents
01 79 00 - Demonstration and Training
01 91 13 – General Commissioning Requirements

DIVISION 02 - EXISTING CONDITIONS
02 41 19 – Selective Demolition and Alterations

DIVISION 03 –06 – NOT USED

DIVISION 07
07 84 13 – Through-Penetration Firestop Systems

DIVISION 08 - DIVISION 22 – NOT USED

DIVISION 23 - HEATING VENTILATING AND AIR CONDITIONING
23 05 00 - Common Work Results for HVAC
23 05 13 - Common Motor Requirements for HVAC Equipment
23 05 29 – Hangers and Supports for HVAC Piping and Equipment
23 05 53 – Identification for HVAC Piping and Equipment
23 07 13 - Duct Insulation
23 31 13 - Metal Ducts
23 33 00 – Air Duct Accessories
23 34 00 – HVAC Fans
23 37 00 - Air Outlets and Inlets

DIVISION 26 – ELECTRICAL
26 00 10 – Supplemental Requirements for Electrical
26 05 00 – Service Entrance Switches and Cabinets
26 05 13 – Medium-Voltage Cables
26 05 19 – Low-Voltage Electrical Power Conductors and Cables
26 05 26 – Grounding and Bonding for Electrical Systems
26 05 29 – Hangers and Supports for Electrical Systems
26 05 33 – Raceway and Boxes for Electrical Systems
26 05 43 – Underground Ducts and Raceways for Electrical Systems
26 05 44 – Sleeves and Sleeve Seals for Electrical Raceways and Cabling
26 05 53 – Identification for Electrical Systems
26 05 73.13 – Short-Circuit Studies
26 05 73.16 – Coordination Studies
26 05 73.19 – Arc-Flash Hazard Analysis
26 09 13 – Electrical Power Monitoring
26 12 19 – Pad-Mounted, Liquid-Filled, Medium-Voltage Transformers
26 22 13 – Low-Voltage Distribution Transformers
26 24 13 – Switchboards

DIVISION 27- COMMUNICATIONS
27 00 00 - Communications

DIVISION 28 – NOT USED

DIVISION 31 – EARTHWORK
31 10 00 – Site Clearing
31 20 00 – Earth Moving

DIVISION 32 – DIVISION 33 – NOT USED

END OF TABLE OF CONTENTS

SECTION 00 02 00
INFORMATION AVAILABLE TO BIDDERS

PART 1 GENERAL

1.01 INFORMATION FOR BIDDERS

A. The information being provided is for the bidder's convenience and does not relieve the bidders from doing their own investigation to determine the accuracy of the information.

1.02 TRANSFORMER

A. The transformer cutsheets are provided for reference.

1.03 SWITCHGEAR

A. The Switchgear cutsheets are provided for reference.

1.04 GEOTECH REPORT

A. S.W. Cole – Exploration and Geotechnical Engineering Services Report dated January 21, 2025 for the Proposed Food Innovation Center Building Addition Rangely Road – Orono, Maine.

PART 2 – NOT USED

PART 3 – NOT USED

END OF SECTION 000200

This Page Left Intentionally Blank

Approval Drawing Submittal

PROJECT:	UMaine Keyo	DATE:	01.08.26
PO#	S6363074	Rev #:	000

To: Richard Pelkey – Wesco Bangor

Please find attached Eaton ISG approval drawing package per your request for the above referenced project.

Bill of Material

(1) 4-Way Single-Sided Padmount Switchgear

Per attached submittal package:

- BOM per Quote 250294-1
- Outline Drawing PS43106666-502A-A01-P0
- Control Cabinet Drawing CA-20201-SCH

Please use the following links to access the catalog section as well as the operations and maintenance manual.

ISG-SD padmount switchgear

Please sign and return with the order release. Thank you.

Approved: _____

Date: _____

Thank you!

Ryan Donnelly
rdonnelly@rmclark.com
R.M. Clark Associates, Inc.

SUBMITTAL REVIEW

REVIEWED

Harriman's review is only for general conformance with the design concept and the information given in the Construction Documents. Review of this submittal does not relieve the contractor from compliance with the requirements of the plans and specifications and applicable laws, codes, and regulations. Review of a specific item shall not indicate review of an assembly of which the item is a component. The contractor is responsible for: dimensions to be confirmed and correlated at the jobsite; information that pertains solely to the fabrication processes or to the means, methods, techniques, sequences and procedures of construction, coordination of the Work with that of all other trades and performing all Work in a safe and satisfactory manner.

HARRIMAN

DATE 1/21/2026 BY Peter Arnold

COORDINATE OPENING IN CONCRETE PAD WITH SWITCH FURNISHED.

Item #2 – ISG Catalog # PS43106666-50XA-A0X-P0 – Keyo

Package includes:

- (1) of Item #2A – 4-Way Single-Sided Padmount Switchgear
- (1) of Item #2B – SEL 751 4-Way Padmount Automation Control
- (2) of Item #2C – 15 kV Potential Transformer
- (4) of Item #2D – 15 kV Elbow Voltage Sensor
- (4) of Item #2E – Motor Operator - Right hand

Item #2A – ISG Catalog # PS43106666-50XA – 4-Way Padmount Switchgear

- Ratings
  - 15.5 kV ratings when applied to 15.5 kV circuits
    - 20 kA symmetrical - Momentary, Make and Latch, Fault Close, and Fault Interrupting
    - 32 kA asymmetrical - Momentary, Make and Latch, Fault Close, and Fault Interrupting
    - 52 kA Peak current
    - 125 kV BIL
- Configuration – 4-Ways
  - (3) Vacuum Fault Interrupter Switch Way(s) with Visible Open Isolation Point device
    - Way(s) 1, 3, and 4
    - (3) Handle(s) that can be padlocked open/closed and hot stick operated
    - (3) Open (Green) and Closed (Red) Semaphore
    - (9) 600-amp bushings
    - (3) 6-pin connectors, one for each VFI Switch Way for Way Status
  - (1) Vacuum Fault Interrupter Protected Way(s) with Visible Open Isolation Point device
    - Way 2
    - (1) Handle(s) that can be padlocked open/closed and hot stick operated
    - (1) Open (Green) and Closed (Red) Semaphore
    - (3) 600-amp bushings
    - (3) Internally mounted 600:1 current transformers installed on each bushing
    - (1) 6-pin Trip and Status Connector
    - (1) 4-pin CT Connectors - one per VFI-protected Way
    - (1) CT Shorting Plug
    - (1) 1A CT shorting board, one per set of 3 phase CTs
- Switchgear Construction
  - Switch tank - 304 stainless steel Sealed, Dead-front
  - Single-Side Padmount 304 stainless steel enclosure with Munsell Green Smooth Powder Coat Finish
    - Dimensions – 84” W x 60” D x 76” H
  - (4) Motor Operator bracket provision(s) installed on each Way
  - (8) Visible Open Windows
  - (12) Load-break parking stands
  - Provisions for mounting CT powered relays on the Padmount enclosure doors
  - Provisions for mounting of external potential transformers on bottom of the switch tank
    - (2) PTs included with this assembly – Item #1C
  - ½” Diameter Grounding Rod

- Proposed switchgear similar to Eaton ISG-SD drawing # PS42206666-301A-A01-P2-OL with the following modifications:
    - Add: Motors on Ways 2 & 3
    - Remove:
        - Kirk Key interlocks on Ways 2 & 3 (cannot be included on Ways with motor operators)
        - CTs, trip coil, and Trip/Status connector on Way 3
    - Update:
        - Ratings to 500 series (15.5kV/20kA)
        - Paint to standard Munsell Green smooth powder coat (P0)
        - Auto-transfer cabinet to standard control cabinet

Item #2B – CA-20195 - SEL 751 4-Way Padmount Automation Control

- Configuration
    - (2) SEL 751 Automation Relays
        - Push Button Config: 8 pushbuttons
        - COM Connectors: Dual Ethernet
        - COM Protocol: DNP3
        - Voltage Inputs: LEA
        - Current Inputs: 1A
        - Conformal Coat: Yes
        - Advanced Features: N/A
    - Test switches for Trip Circuits / CT shorting / Voltage potentials
        - (1) ABB FT-1 test switch, one per VFI protected Way
        - (1) ABB FT-1 test switch for voltage for Ways 1 & 4
    - 120 VAC to 24 VDC Power supply / charging system
        - Including 24VDC backup battery
    - (1) Local/remote switch
    - (1) Phoenix 10-Port ethernet switch
    - Each relay to have 7 discrete outputs and 6 discrete inputs
- Construction
    - Mounted on the left side of the padmount enclosure
    - 304 stainless steel with utility green powder coat finish
    - Padmount style door
    - Heater and Thermostat
    - Rain gutter and vandal guard built into design of low voltage cabinet
    - Connectors will be located on the bottom of the control cabinet
    - Cable enclosure will protect and enclose connectors to the high voltage enclosure
- Connections on control cabinet
    - (3) 6 pin Connectors – Status from Ways 1, 3, & 4
    - (1) 6 pin Connectors – Status and Trip from Way 2
    - (1) 4 pin Connectors – CT Inputs from Way 2
    - (4) 7 pin Connectors - Motor Operators – power and status
    - (2) 3-pin Connector - AC voltage inputs from PTs for control power
    - (4) Cord grips for external 3 phase elbow voltage sensors
    - (1) Cord grip for communications
- Cables
    - (3) M/F cables for Status
    - (1) M/F cable for Trip and Status
    - (1) M/F cable for CT inputs
    - (4) M/F cables for Motor Operators
    - (2) F plug / pigtail – for 120v AC voltage input from external PT

- Proposed control cabinet similar to Eaton ISG-SD drawing # CA-20160-SCH with the following modifications:
    - Remove:
        - Way 4 FT-1 test switch
        - CT connector on Way 4
    - Update:
        - The first relay to control Way 1, Way 3, & Way 4
        - The second relay to control Way 2
        - Relays per above requirements
        - Ethernet switch to 10-port Phoenix
    - Add: Local/Remote switch

Item #2C – 15 kV Potential Transformer

- XXXXX kV / XXXX volts line to ground (Customer to provide)
- Includes: Padmount cradle and bracket with horizontal facing terminations
- **Requires but not supplied with switchgear:**
    - **ETPs to be installed on back of 600-amp T-bodies on "B" phase of both Source Ways**
    - **To be used as voltage sensors for "B" phase of each Source Way**

Item #2D - 15 kV Elbow Voltage Sensor

- 9532 – 15 kV Lindsey Elbow Sensor
- 1400:1 Ratio – approximate 5V output
- **Required but not supplied with switchgear:**
    - **ETPs with 200-amp terminations installed on back of 600-amp T-bodies on A and C phases of both Source Ways supplied by End User.**
    - **B phase voltage sensing will be provided by control power PTs**

Item #2E – FA-10034 - Motor Operator - Right hand

- 304 Stainless Steel
- 24vDC Padmount motor operators
- Includes: mounting hardware and linkage

REVISIONS			
REV.	DESCRIPTION	INITIALS	DATE

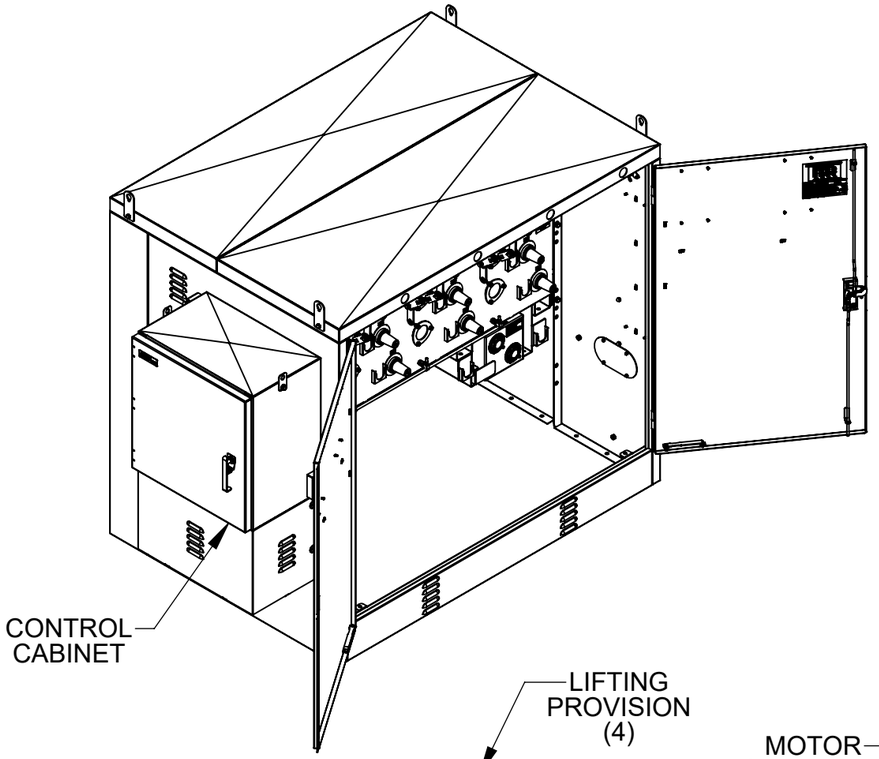

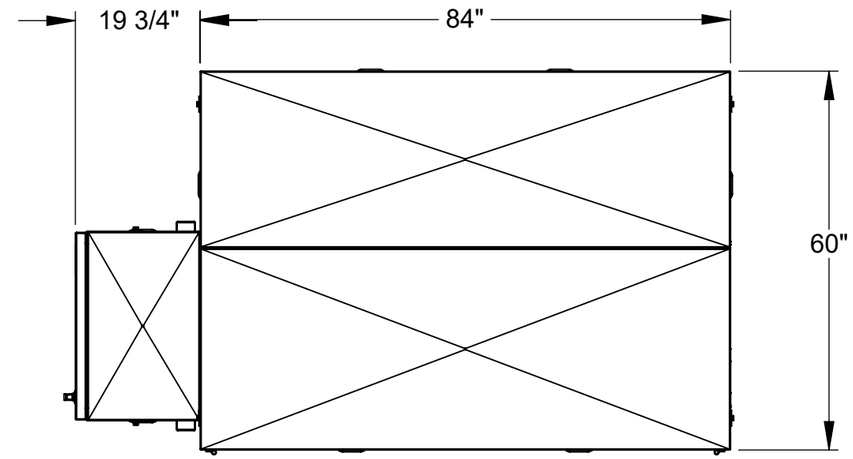

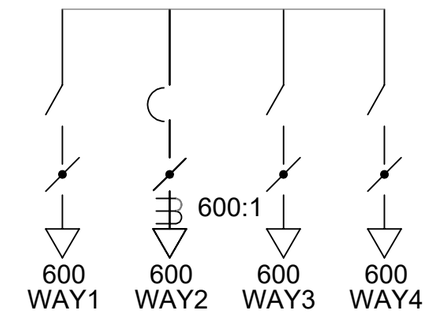

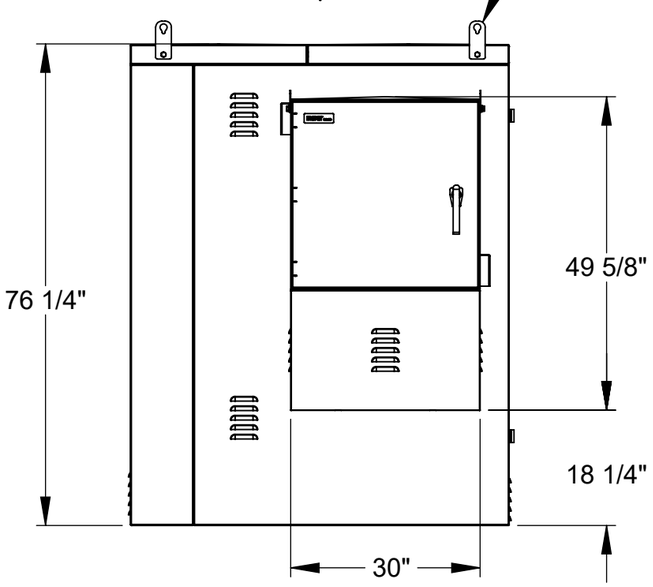

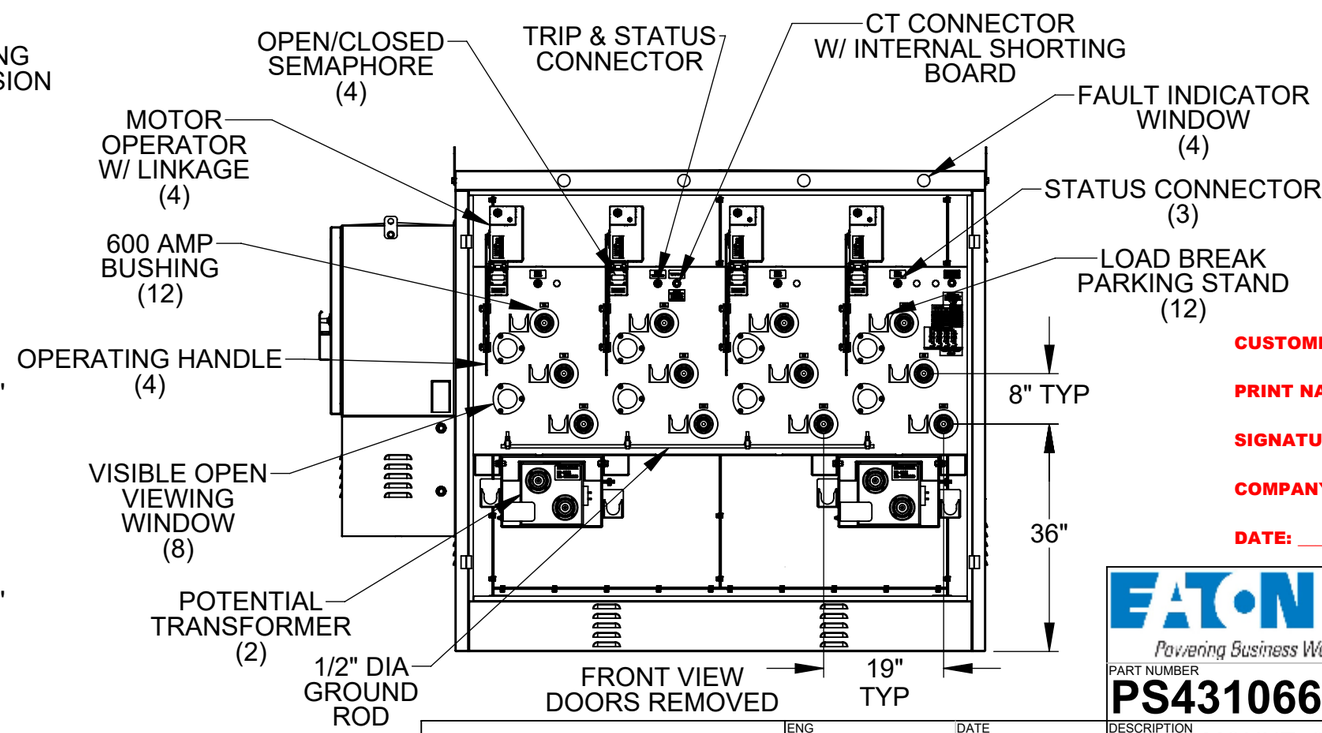

CUSTOMER APPROVAL – Engineer of Record

PRINT NAME: _____

SIGNATURE: _____

COMPANY: _____

DATE: _____

EATON
Powering Business Worldwide

1765 W. 160th STE 100
Broomfield, CO 80023

PART NUMBER
PS43106666-502A-A01-P0

DESCRIPTION
PADMOUNT, SINGLE SIDED, 27KV/16KA, 15.5KV/20KA, 4WAY, 3WAY SWITCH, 1WAY VFI PROTECTED WITH VOIP

DRAWING NUMBER
PS43106666-502A-A01-P0-OL

REV 1-01

DO NOT SCALE DRAWING

CAD FILE PS43106666-502A-A01-P0-OL

PROJECT NAME:
University of Maine - Keyo

ISG SO 1720

EATON CONFIDENTIAL

MATERIAL
304 STAINLESS STEEL

FINISH
MUNSELL 7GY3.29/1.5

WEIGHT
SEE NOTES

UNLESS OTHERWISE SPECIFIED DIMENSIONS ARE IN INCHES

UNLESS OTHERWISE SPECIFIED TOLERANCES ARE: ± 1/16

ENG P BADWAIK DATE 15 DEC 2025

DRAWN P BADWAIK DATE 15 DEC 2025

ENG APPR DATE

ALL DIMENSIONS PER ASME Y14.5 1994

B

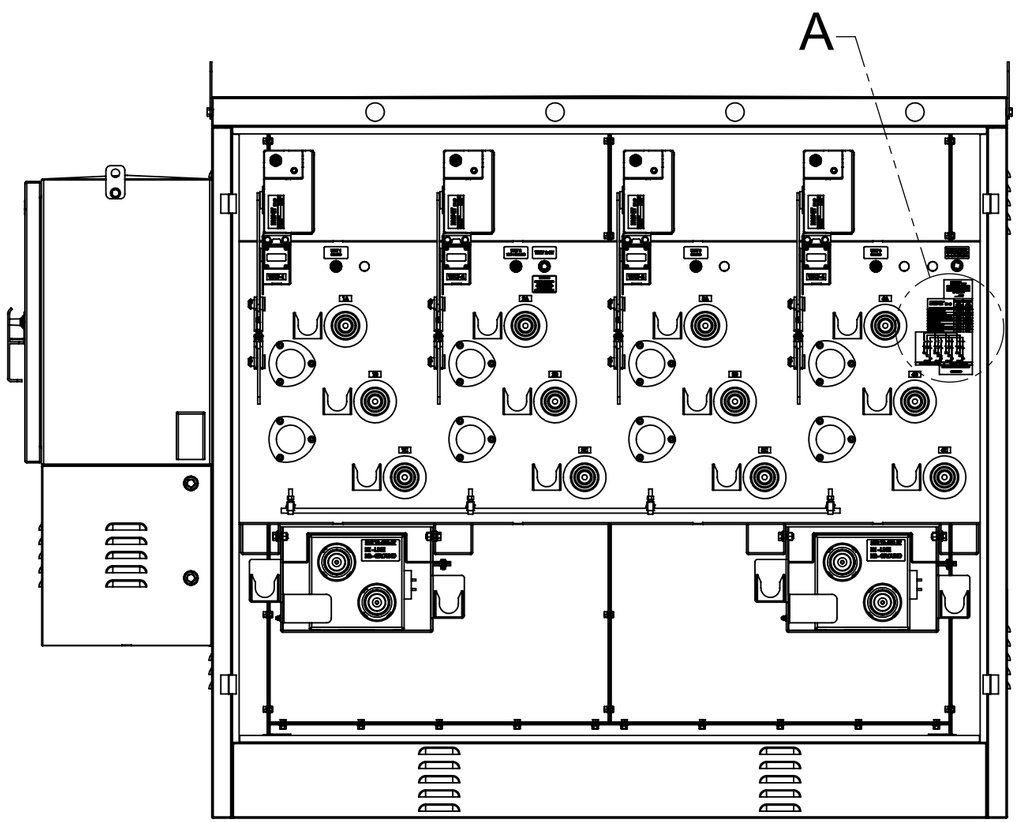

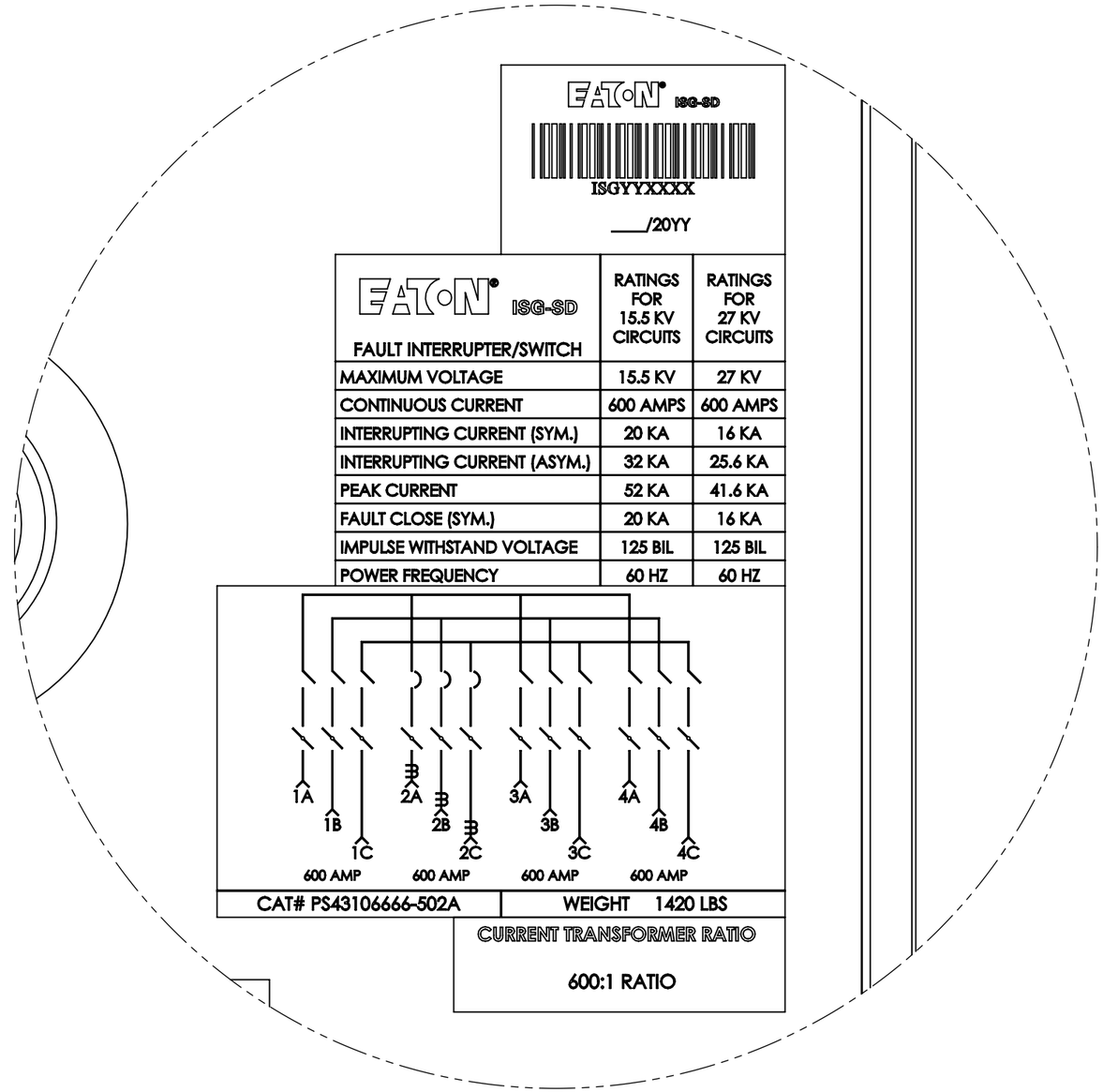

DETAIL A
NAMEPLATE DETAIL

EATON CONFIDENTIAL

EATON
Powering Business Worldwide

1765 W. 160th STE 100
Broomfield, CO 80023

2 OF 4	PART NUMBER	REV
	PS43106666-502A-A01-P0	1-01

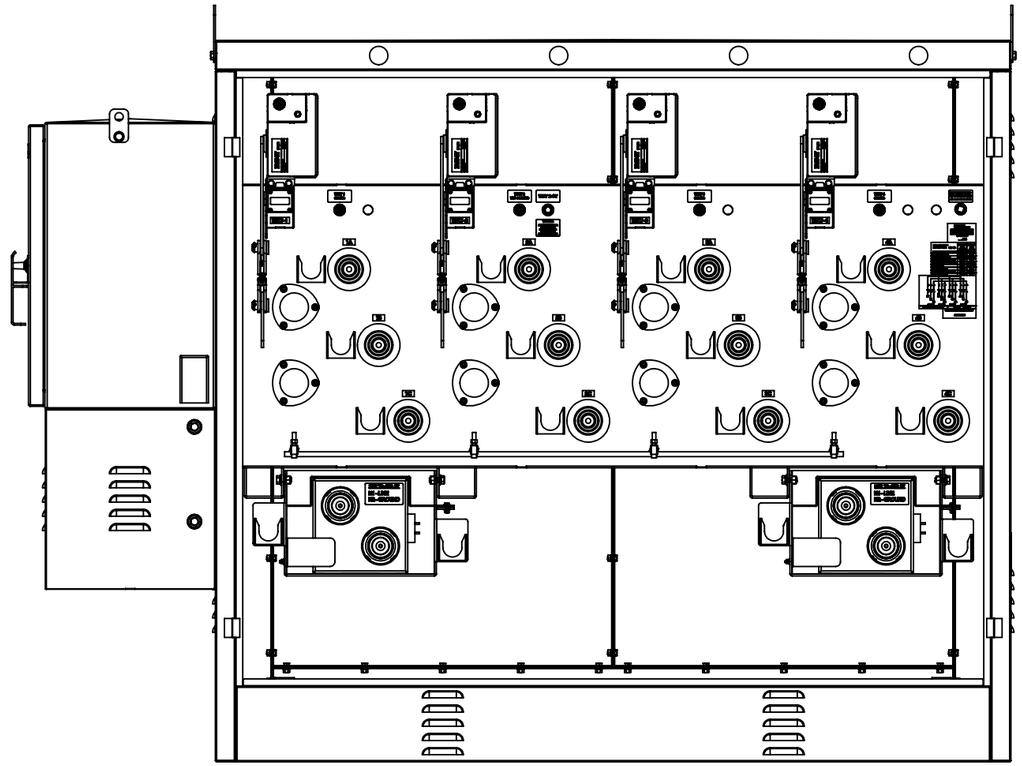

PACKAGE INCLUDES (NOT SHOWN ON DRAWING)
(4) M/F 7-PIN CABLES - MOTOR OPERATOR CONNECTION TO CONTROL CABINET
(3) M/F 6-PIN CABLES - STATUS CONNECTION TO CONTROL CABINET
(1) M/F 6-PIN CABLES - TRIP AND STATUS CONNECTION TO CONTROL CABINET
(1) M/F 4-PIN CABLES - CT CONNECTION TO CONTROL CABINET
(2) F 3-PIN CABLE - PLUG/PIGTAIL PT CONNECTION TO CONTROL CABINET
(1) CT SHORTING PLUGS
(4) ELBOW VOLTAGE SENSORS

APPROXIMATE SYSTEM WEIGHTS

SWITCH TANK: 1420 LBS
GROUND ROD: 5 LBS
ENCLOSURE: 1170 LBS
MOTOR OPERATORS: 35 LBS EA
CONTROL CABINET: 500 LBS
POTENTIAL TRANSFORMERS: 155 LBS EA

PT: 15KV, 4160/2400 LINE TO GROUND, 20:1 RATIO
ELBOW VS: 420:1 RATIO, 17 FT CABLES, 0-5.14VAC OUTPUT

EATON
Powering Business Worldwide
1765 W. 160th STE 100
Broomfield, CO 80023

EATON CONFIDENTIAL

PART NUMBER PS43106666-502A-A01-P0

REV 1-01

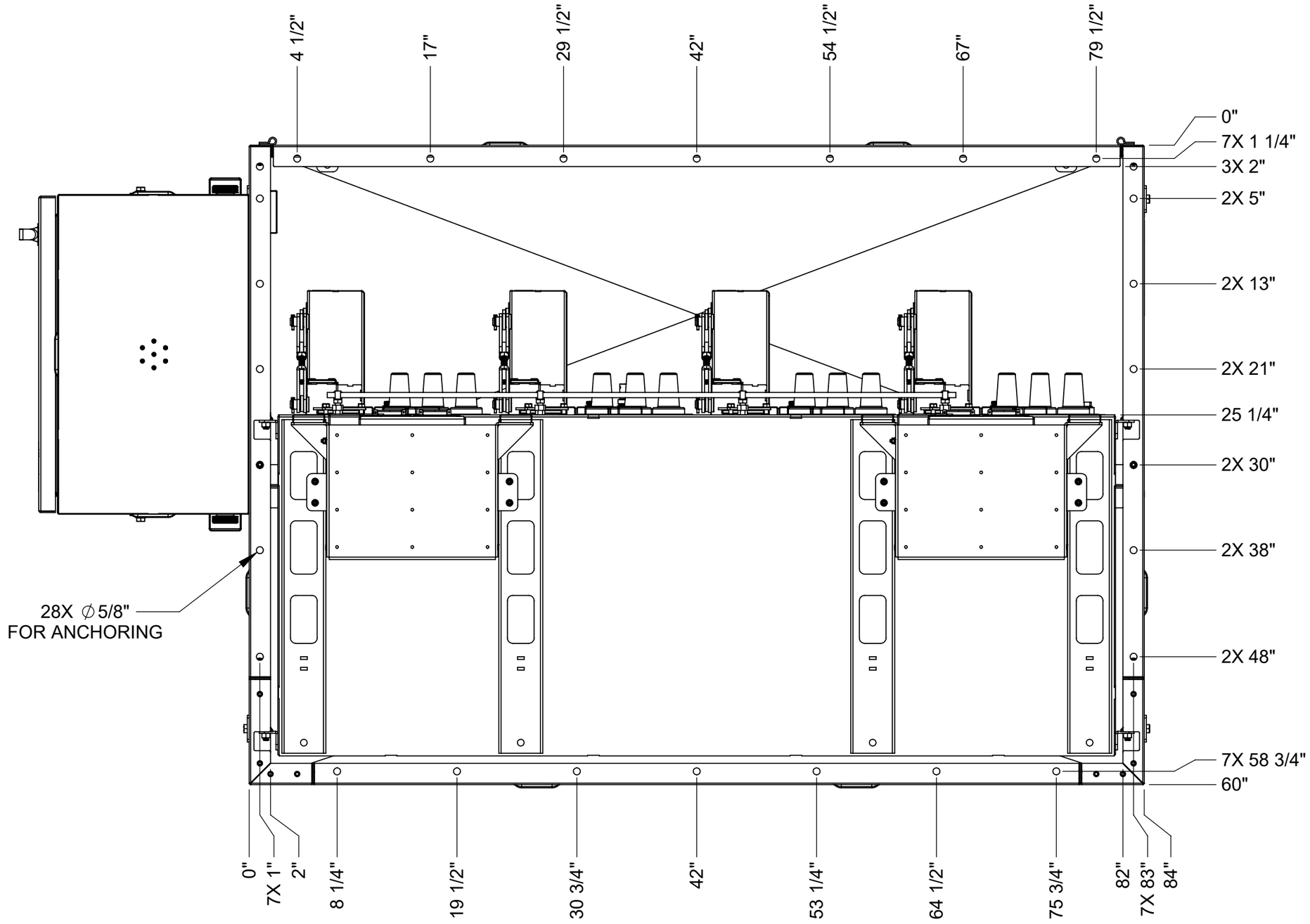

BOTTOM VIEW
FOR ANCHORING
AND CABLE CLEARANCE

EATON
Powering Business Worldwide

1765 W. 160th STE 100
Broomfield, CO 80023

EATON CONFIDENTIAL

4 OF 4

PART NUMBER
PS43106666-502A-A01-P0

REV
1-01

REVISIONS			
REV.	DESCRIPTION	INITIALS	DATE

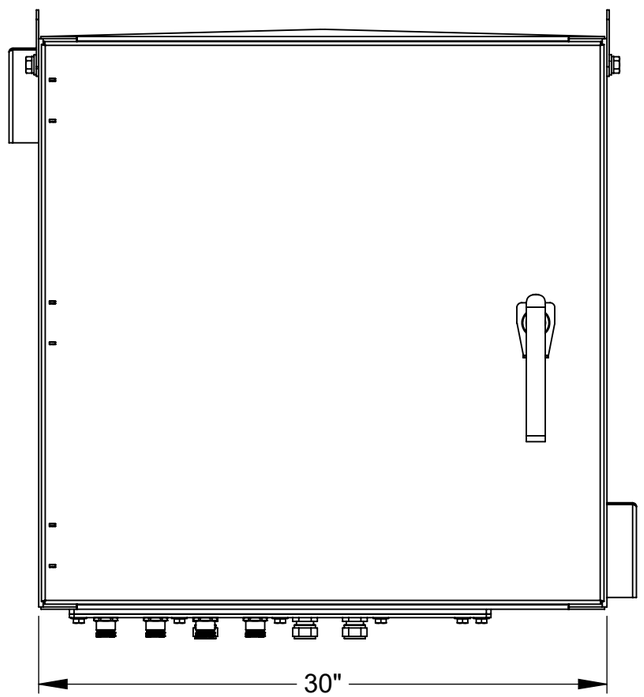

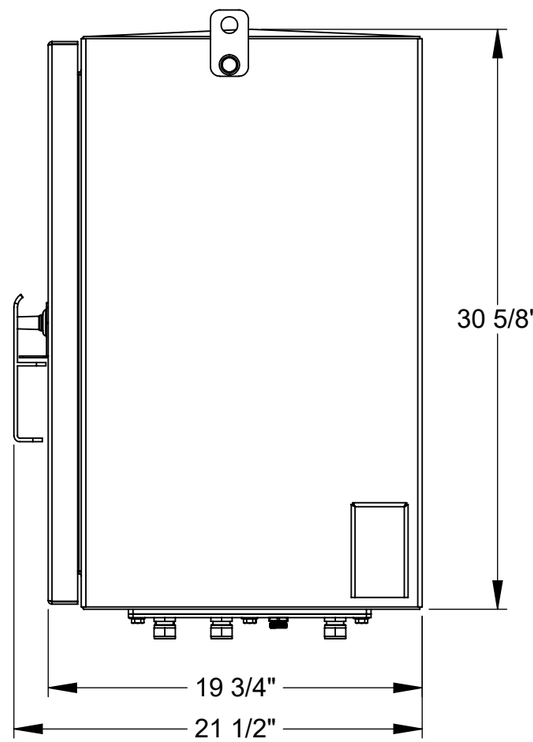

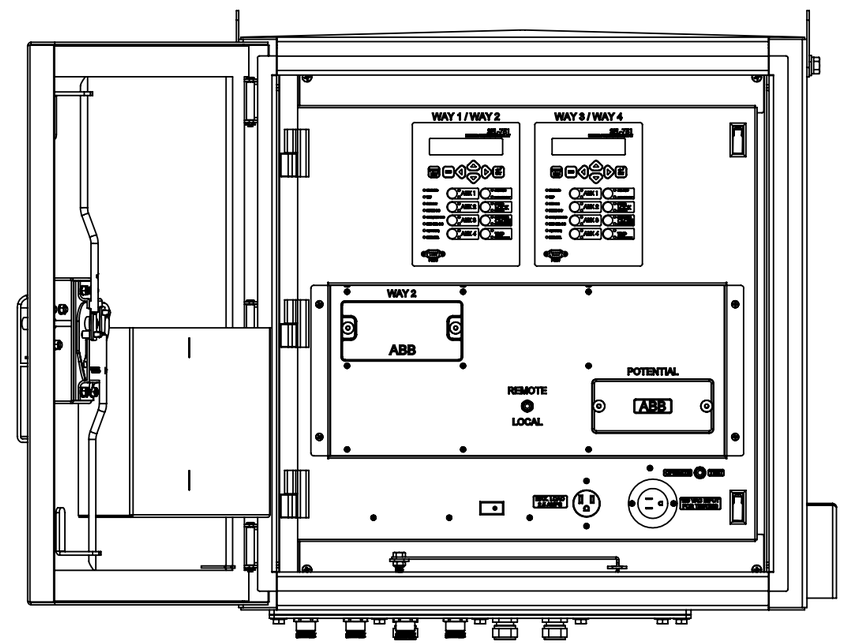

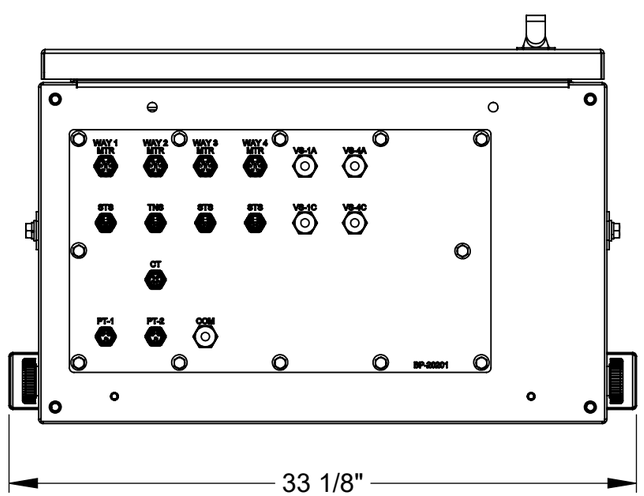

CUSTOMER APPROVAL – Engineer of Record

PRINT NAME: _____

SIGNATURE: _____

COMPANY: _____

DATE: _____

PROJECT NAME:
University of Maine - Keyo
ISG SO # 1720

This control cabinet is for use with Eaton-ISG
Catalog # PS43106666-502A0-A01-P0

EATON CONFIDENTIAL

ENG	P BADWAIK	DATE	19 DEC 2025
DRAWN	P BADWAIK	DATE	19 DEC 2025
ENG APPR		DATE	

CONTROL CABINET, MAIN ASSEMBLY, 4 WAY, (2) 751 RELAYS, (1) FT-1 SHORTING, (1) FT-1 POTENTIAL

EATON
Powering Business Worldwide

1765 W. 160th STE 100
Broomfield, CO 80023

1 OF 11

PART NUMBER CA-20201-SCH

REV 1-01

ITEM NO.	PART NUMBER	DESCRIPTION	QTY.
1	PP-10247	FLANGED INLET, 15 AMP, 120 AC, HUBBELL# HBL5278C	1
2	PP-10315	PLUG, HUBBLE RECEPTACLE, #HBL5261	1
3	RLY-0164	751002B1B1B4BL10F21, 8PB, 22DI/8DO, DUAL ETH, DNP3, LEA, 1A, CC	2
4	PP-10311	SWITCH, TOGGLE, DPDT, HONEYWELL #2NT1-3	1
5	PP-10316	DOOR SWITCH, HONEYWELL S&C #1DM1	1
6	PP-10321	FT-1 POTENTIAL ASM, STYLE#129A501G01B, CODE# 001, INT SCHEMATIC# 991A001	1
7	PP-11191	FT-1 CT SHORTING SWITCHES, STYLE #C991A00DG01, T T C-C C-C C-C W W, P2 P2 C1-C1 C1-C1 C1-C1 P8 P8, W/ CLEAR COVER	1
8	PP-10972	HOUSING, RECEPTACLE, 2POS, MOLEX 42816-0212 OR EQUIV	1
9	PP-10973	HOUSING, PLUG, 2POS, MOLEX 42818-0212 OR EQUIV	1
10	PP-10305	BATTERY-28AH-12VDC, POWER SONIC-PS-12280	2
11	PP-11400	TB, FUSE HOLDER, WEIDMULLER WSI #1886580000	16
12	PP-10347	TB, END CLAMP, WEIDMULLER WEW 35/2 END ANCHOR #1061200000	9
13	PP-10350	TB, TERMINAL BLOCK, WEIDMULLER WDU4 ##1020100000	45
14	PP-10391	BAR, GROUNDING, 14 POSITION, EATON# GBK1420 OR EQUIV	1
15	PP-11023	POWER SUPPLY, 120AC/24VDC, 20 AMP OUTPUT, NEWMAR# DIN-UPS 24-20	1
16	PP-10319	CONTROL CABINET HEATER , STEGO 14001.0-00, 30 WATT 120-240 VAC	1
17	PP-10328	THERMOSTAT, STEGO KTO 111 SERIES# 11100.9-00	1
18	PP-10340	VENT, CONTROL CABINET, PLASTIC, HOFFMAN # APCDABS	2
19	PP-10382	CORD GRIP, 304 S/S, 1/2 NPT THREAD, CABLE SIZE .375 TO .438" REMKE# RSSS-107	5
20	PP-10324	RELAY, DPDT, 15 AMP, 120, TE ELECTRONICS, #KUMP-11A18-120	1
21	PP-10325	SOCKET, RELAY, TRACK MOUNT, 27E893, TE ELECTRONICS-----C-2-1419106-5-D-3D	1
22	CAB-0061	CABLE, 10 FEET, ETHERNET, MOT#CA605CBX010, KEY CODE 3834	2
23	CON-0012	CONNECTOR, 7 PIN FEMALE, 16GA, 6 FT, (1.8M), MENCOM #MIN-7FR2-6-SS-ISG	4
24	CON-0022	CONNECTOR, FEMALE 6 PIN ,16AWG, MENCOM#MIN-6FR-6-SS	4
25	CON-0014	CONNECTOR, 4 PIN, MALE, 14 GA, MENCOM #MINH-4MR-2M-SS	1
26	CON-0011	CONNECTOR, 3 PIN, MALE, 14 GA, 2M PIGTAIL, MENCOM# MINH-3MR-2M-SS	2
27	PP-11158	SPARE FUSE HOLDER, WEIDMULLER #7914760001	1
28	PP-11439	PHOENIX# 1732185, 8 RJ45, 2 SFP, ETHERNET SWITCH	1
29	PP-11074	RESISTOR, 510K OHM, 2W, 5%, AXIAL, THRU HOLE	2
30	PP-11073	RESISTOR, 24K OHM, 2W, 5%, AXIAL, THRU HOLE	2
31	PP-10250	SWITCH, TOGGLE, SPDT, HONEYWELL #1NT1-3;ALLIED ELECTROINCS P/N#70120167	1

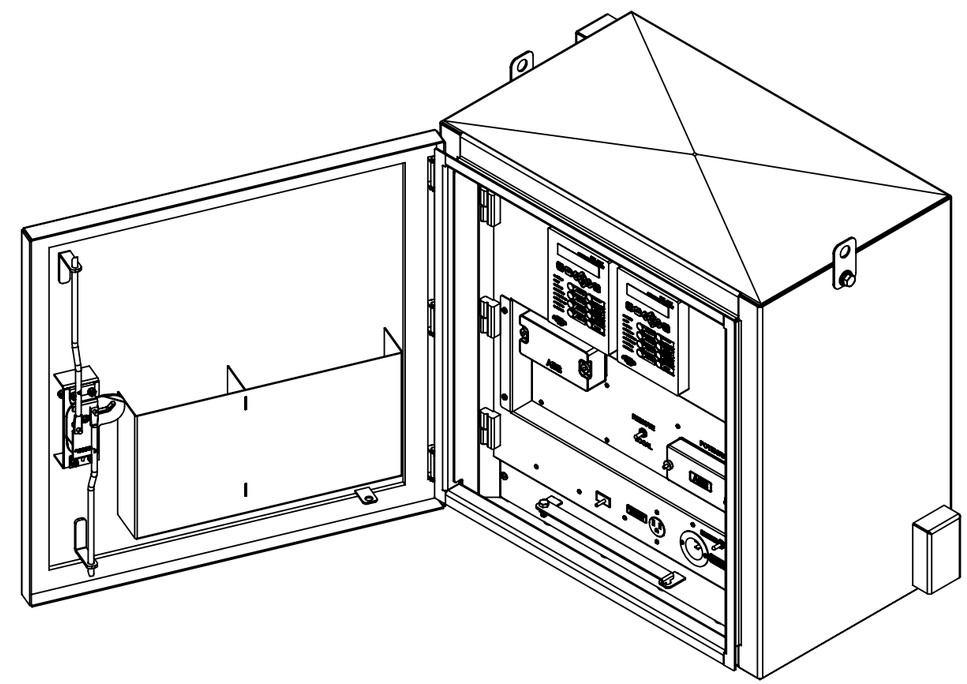

EATON CONFIDENTIAL

EATON Powering Business Worldwide

1765 W. 160th STE 100
Broomfield, CO 80023

PART NUMBER CA-20201-SCH

REV 1-01

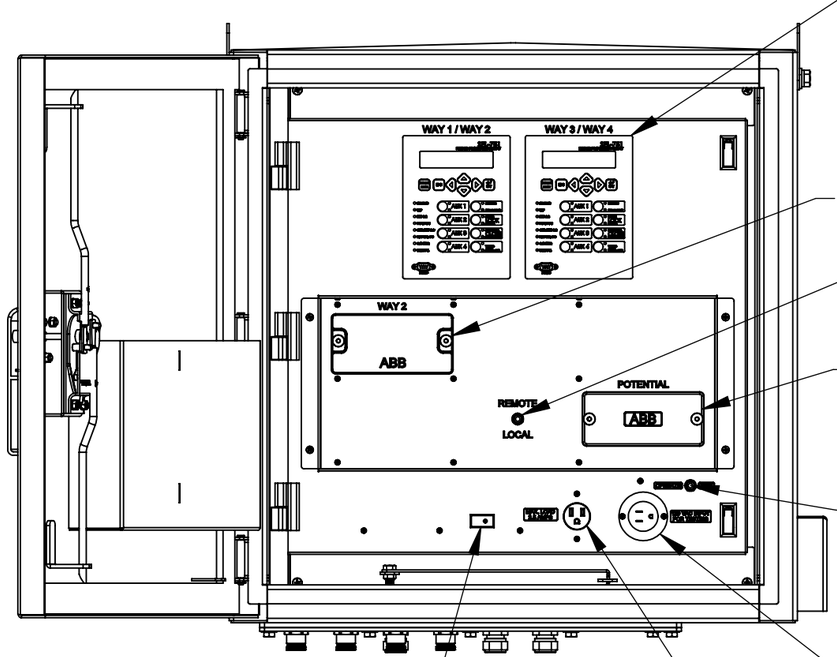

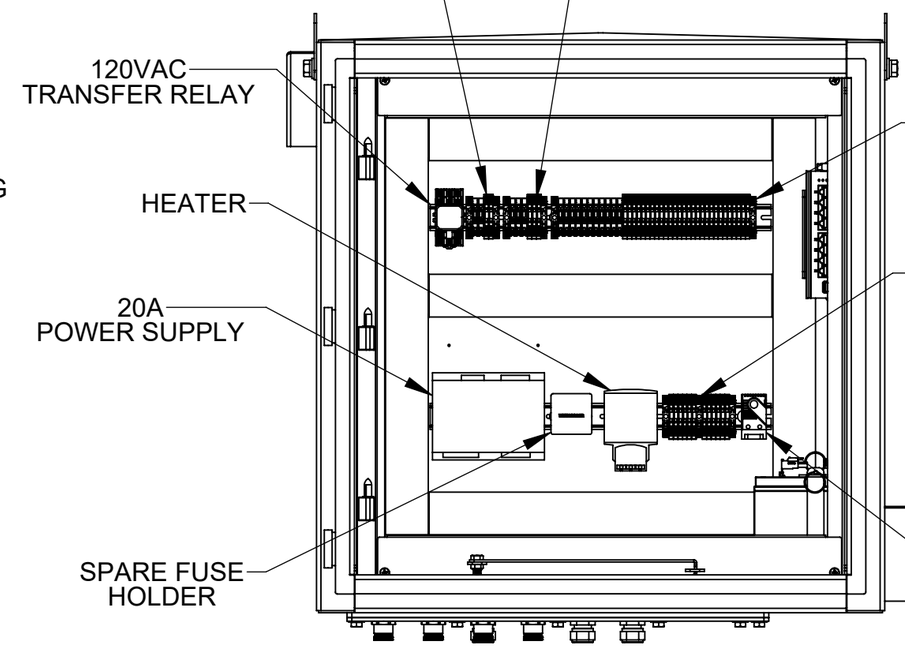

BOTH DOORS REMOVED

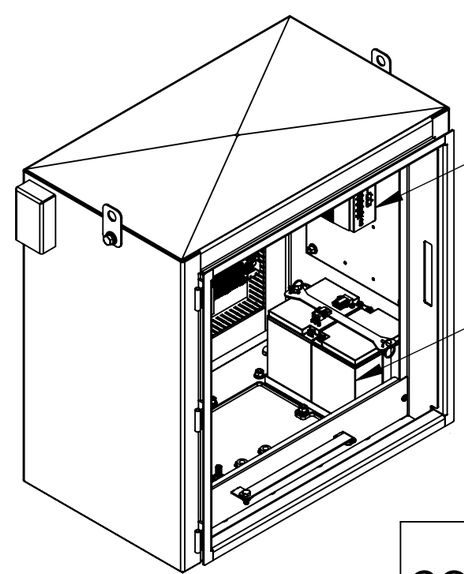

EATON CONFIDENTIAL

EATON
Powering Business Worldwide

1765 W. 160th STE 100
Broomfield, CO 80023

3 OF 11

PART NUMBER
CA-20201-SCH

REV
1-01

ITEM NO.	PART NUMBER	DESCRIPTION	QTY.
1	CAB-0061	CABLE, 10 FEET, ETHERNET, MOT#CA605CBX010, KEY CODE 3834	2
2	PP-11439	PHOENIX# 1732185, 8 RJ45, 2 SFP, ETHERNET SWITCH	1
3	RLY-0164	751002B1B1B4BL10F21, 8PB, 22DI/8DO, DUAL ETH, DNP3, LEA, 1A, CC	2

SEL CABLE SCHEDULE

DEVICE - PORT	CABLE	WIRE LABEL	DEVICE - PORT
W1/2 751 - PORT 1	CAB-0061	W1/2 ETH	ETH SW - PORT 1
W3/4 751 - PORT 1	CAB-0061	W3/4 ETH	ETH SW - PORT 2

NOTE: LABEL CABLES ON EACH END USING BRADY ADHESIVE WRAP-AROUND LABELS

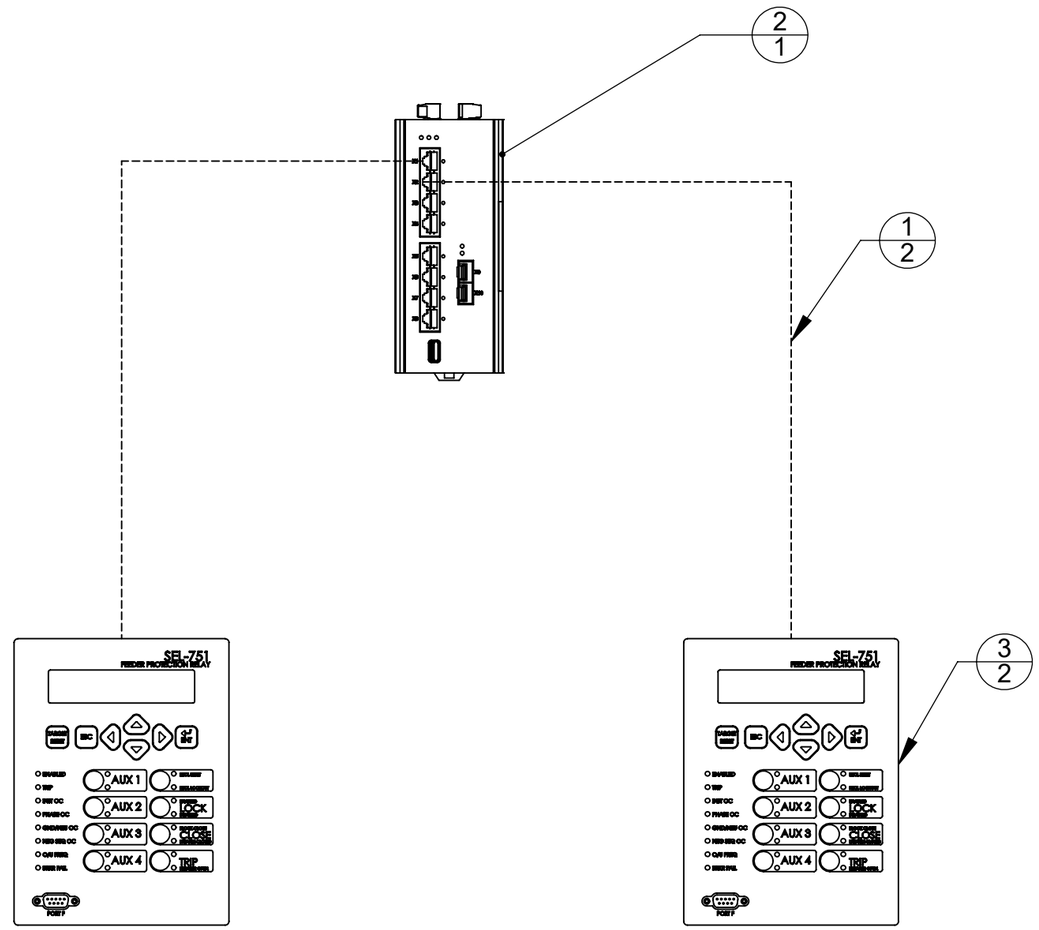

COM CONNECTIONS

EATON
Powering Business Worldwide

1765 W. 160th STE 100
Broomfield, CO 80023

EATON CONFIDENTIAL

4 OF 11

PART NUMBER CA-20201-SCH

REV 1-01

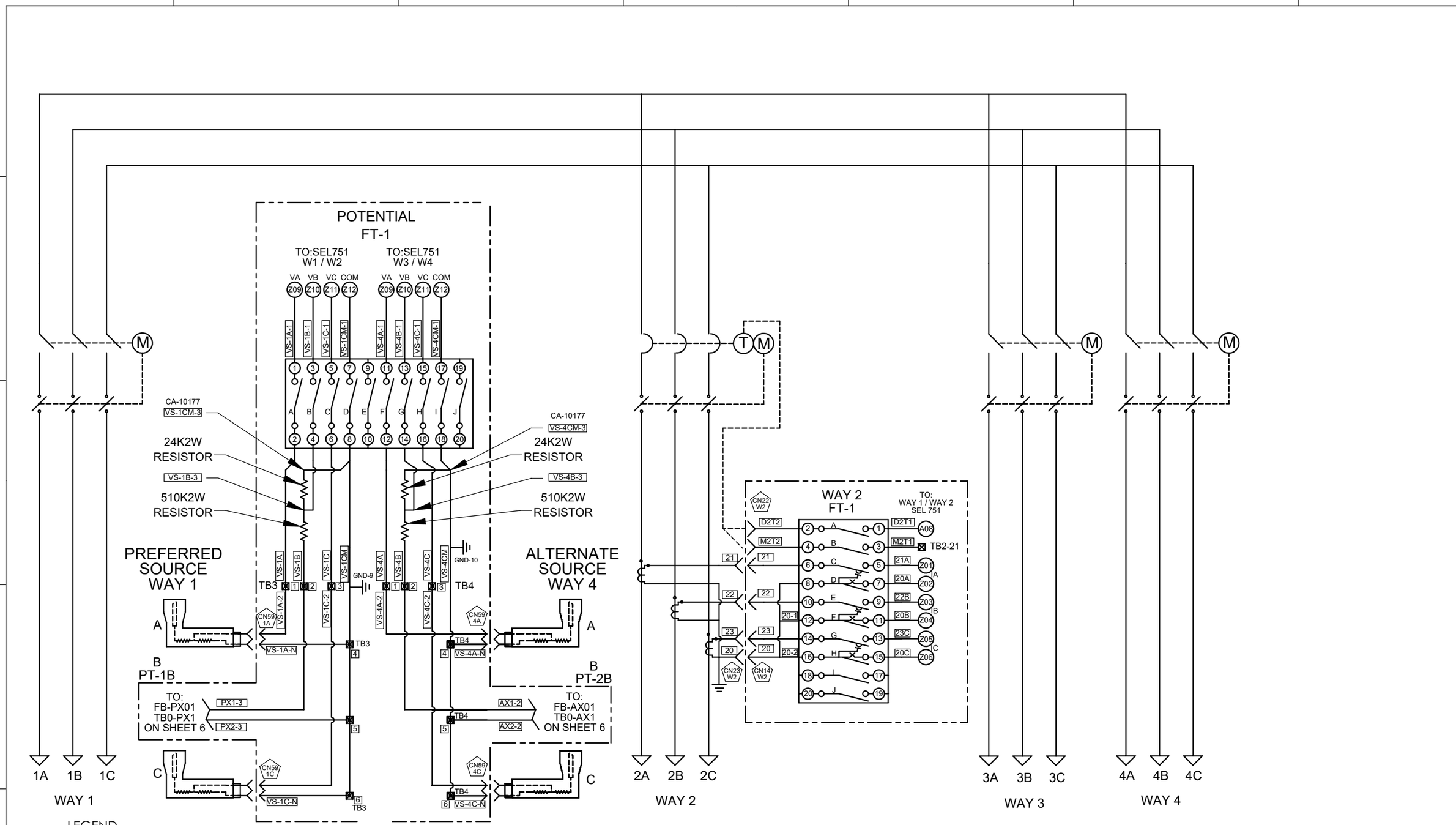

EATON CONFIDENTIAL

Powering Business Worldwide

1765 W. 160th STE 100
Broomfield, CO 80023

5 OF 11

PART NUMBER CA-20201-SCH

REV 1-01

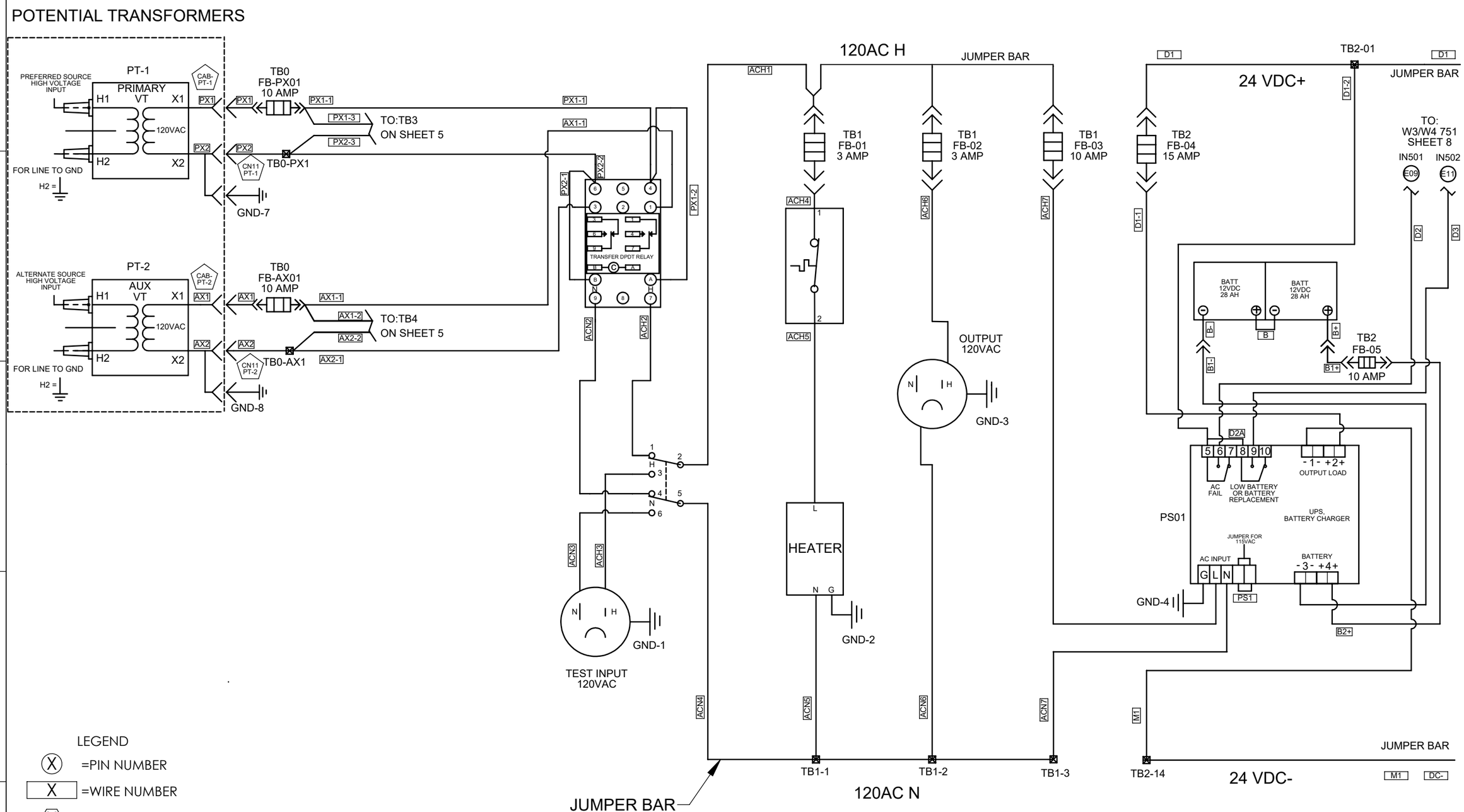

EATON CONFIDENTIAL

Powering Business Worldwide

1765 W. 160th STE 100
Broomfield, CO 80023

6 OF 11

PART NUMBER CA-20201-SCH

REV 1-01

WAY 1 / WAY 2

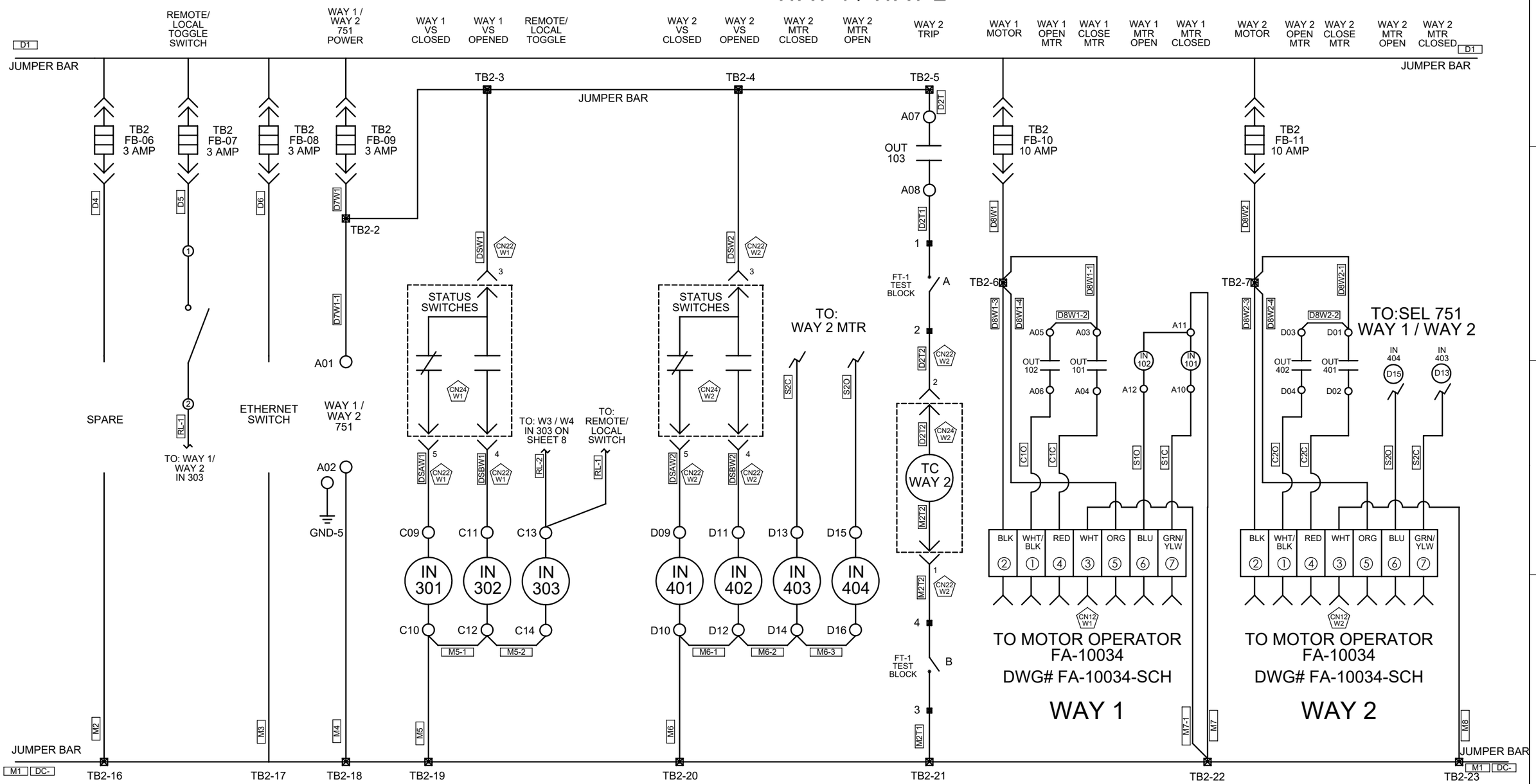

LEGEND

(X) =PIN NUMBER

⟨X⟩ =ITEM NUMBER

[X] =WIRE NUMBER

[- - -] = SWITCH TANK

EATON CONFIDENTIAL

EATON Powering Business Worldwide

1765 W. 160th STE 100
Broomfield, CO 80023

7 OF 11

PART NUMBER CA-20201-SCH

REV 1-01

WAY 3 / WAY 4

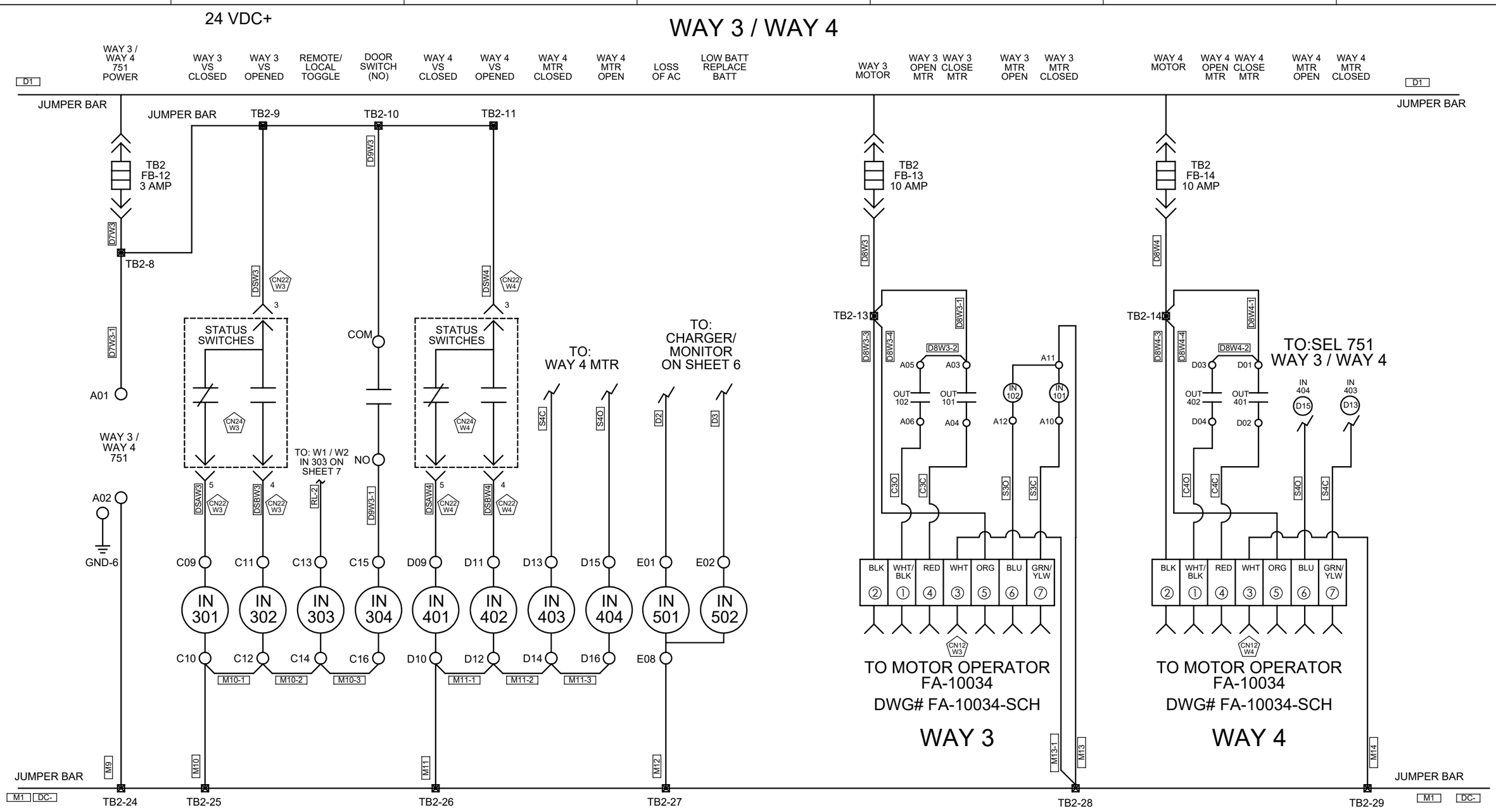

EATON
Powering Business Worldwide

1765 W. 160th STE 100
Broomfield, CO 80023

EATON CONFIDENTIAL

8 OF 11

PART NUMBER CA-20201-SCH

REV 1-01

SEL 751 INPUT AND OUTPUT LIST
WAY 1 / WAY 2

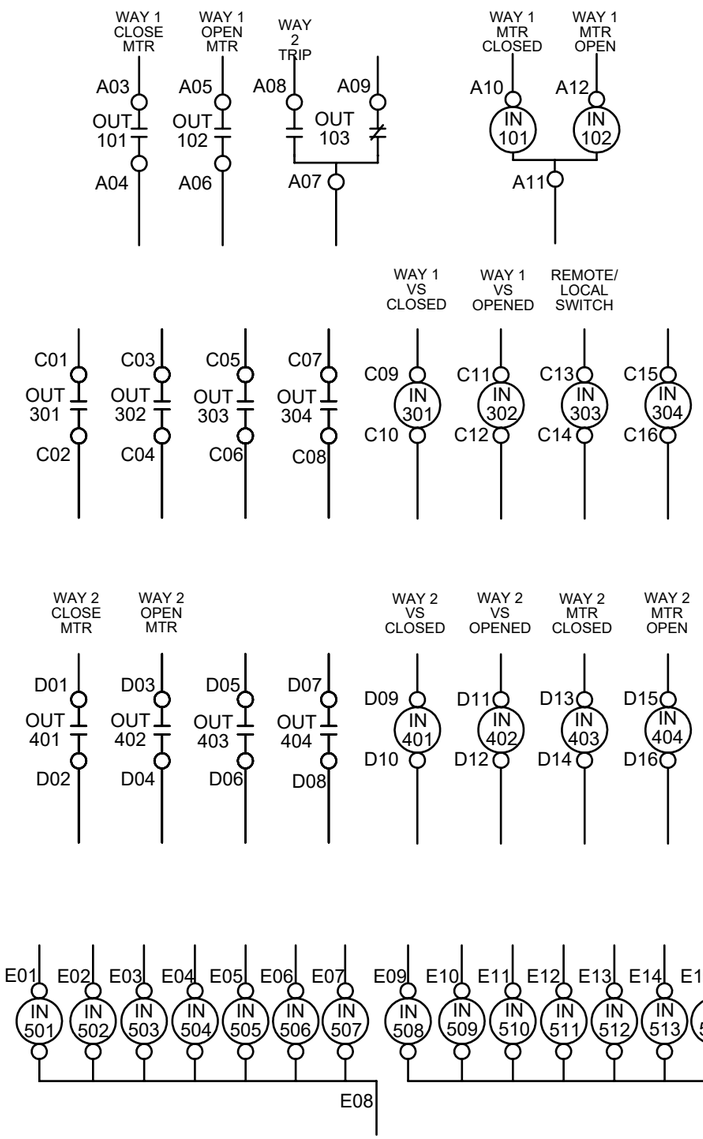

SEL 751 INPUT AND OUTPUT LIST
WAY 3 / WAY 4

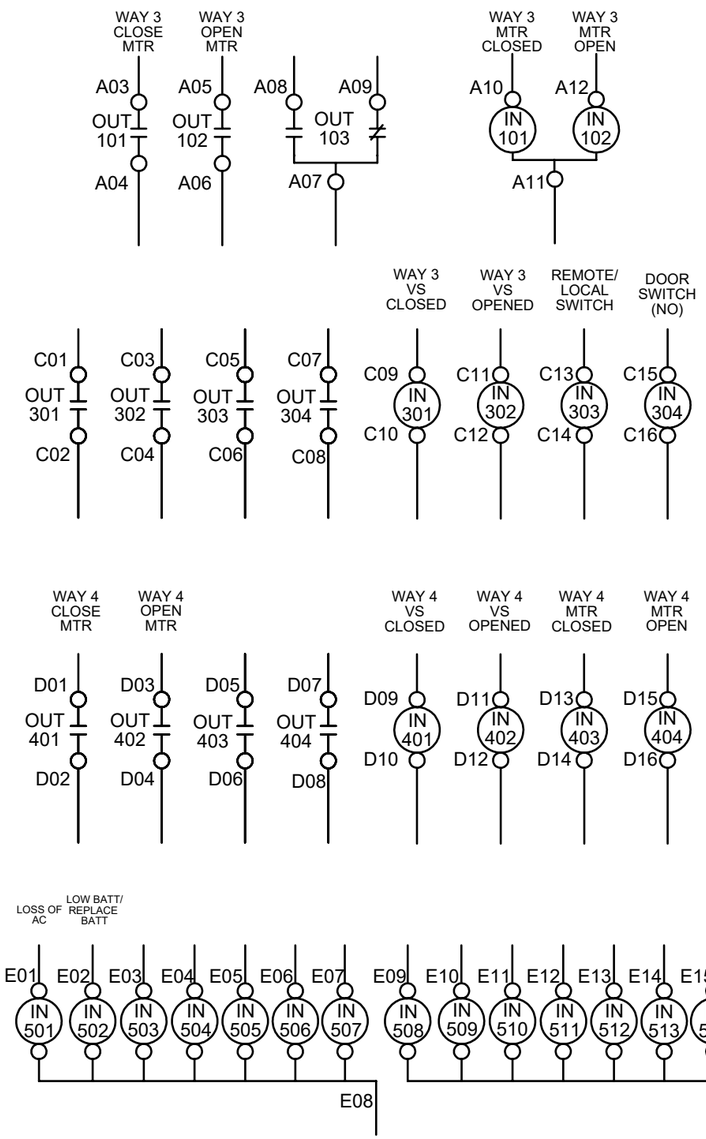

EATON
Powering Business Worldwide
1765 W. 160th STE 100
Broomfield, CO 80023

EATON CONFIDENTIAL

PART NUMBER CA-20201-SCH

REV 1-01

CONNECTOR SCHEDULE- CONTROL CABINET

WAY 1

CN12 W1 — CON-0012 / W1-MTR / CONTROL CABINET

PIN	WIRE #	WIRE COLOR	FUNCTION	WIRE AWG
1	C1O	WHT/BLK	CONTROL-OPEN	18 AWG
2	D8W1-3	BLACK	24VDC+	14 AWG
3	M7-1	WHITE	24VDC-	14 AWG
4	C1C	RED	CONTROL-CLOSE	18 AWG
5	D8W1-4	ORANGE	STATUS-COMMON	18 AWG
6	S1O	BLUE	STATUS-OPEN	18 AWG
7	S1C	GRN/YLW	STATUS-CLOSED	18 AWG

CN22 W1 — CON-0022 / W1-STS / CONTROL CABINET

PIN	WIRE #	WIRE COLOR	FUNCTION	WIRE AWG
1		WHITE		16 AWG
2		RED		16 AWG
3	DSW1	GRN/YLW	STATUS SW COMMON	16 AWG
4	DSBW1	ORANGE	STATUS SW OPEN	16 AWG
5	DSAW1	BLACK	STATUS SW CLOSED	16 AWG
6		BLUE		16 AWG

WAY 2

CN12 W2 — CON-0012 / W2-MTR / CONTROL CABINET

PIN	WIRE #	WIRE COLOR	FUNCTION	WIRE AWG
1	C2O	WHT/BLK	CONTROL-OPEN	18 AWG
2	D8W2-3	BLACK	24VDC+	14 AWG
3	M8	WHITE	24VDC-	14 AWG
4	C2C	RED	CONTROL-CLOSE	18 AWG
5	D8W2-4	ORANGE	STATUS-COMMON	18 AWG
6	S2O	BLUE	STATUS-OPEN	18 AWG
7	S2C	GRN/YLW	STATUS-CLOSED	18 AWG

CN22 W2 — CON-0022 / W2-TNS / CONTROL CABINET

PIN	WIRE #	WIRE COLOR	FUNCTION	WIRE AWG
1	M2T2	WHITE	TRIP COIL -	16 AWG
2	D2T2	RED	TRIP COIL +	16 AWG
3	DSW2	GRN/YLW	STATUS SW COMMON	16 AWG
4	DSBW2	ORANGE	STATUS SW OPEN	16 AWG
5	DSAW2	BLACK	STATUS SW CLOSED	16 AWG
6		BLUE		16 AWG

CN14 W2 — CON-0014 / W2-CT / CONTROL CABINET

PIN	WIRE #	WIRE COLOR	FUNCTION	WIRE AWG
1	21	BLACK	A PHASE CT	14 AWG
2	22	WHITE	B PHASE CT	14 AWG
3	23	RED	C PHASE CT	14 AWG
4	20	GRN/YLW	ABC CT COMMON	14 AWG

WAY 3

CN12 W3 — CON-0012 / W3-MTR / CONTROL CABINET

PIN	WIRE #	WIRE COLOR	FUNCTION	WIRE AWG
1	C3O	WHT/BLK	CONTROL-OPEN	18 AWG
2	D8W3-3	BLACK	24VDC+	14 AWG
3	M13-1	WHITE	24VDC-	14 AWG
4	C3C	RED	CONTROL-CLOSE	18 AWG
5	D8W3-4	ORANGE	STATUS-COMMON	18 AWG
6	S3O	BLUE	STATUS-OPEN	18 AWG
7	S3C	GRN/YLW	STATUS-CLOSED	18 AWG

CN22 W3 — CON-0022 / W3-STS / CONTROL CABINET

PIN	WIRE #	WIRE COLOR	FUNCTION	WIRE AWG
1		WHITE		16 AWG
2		RED		16 AWG
3	DSW3	GRN/YLW	STATUS SW COMMON	16 AWG
4	DSBW3	ORANGE	STATUS SW OPEN	16 AWG
5	DSAW3	BLACK	STATUS SW CLOSED	16 AWG
6		BLUE		16 AWG

WAY 4

CN12 W4 — CON-0012 / W4-MTR / CONTROL CABINET

PIN	WIRE #	WIRE COLOR	FUNCTION	WIRE AWG
1	C4O	WHT/BLK	CONTROL-OPEN	18 AWG
2	D8W4-3	BLACK	24VDC+	14 AWG
3	M14	WHITE	24VDC-	14 AWG
4	C4C	RED	CONTROL-CLOSE	18 AWG
5	D8W4-4	ORANGE	STATUS-COMMON	18 AWG
6	S4O	BLUE	STATUS-OPEN	18 AWG
7	S4C	GRN/YLW	STATUS-CLOSED	18 AWG

CN22 W4 — CON-0022 / W4-STS / CONTROL CABINET

PIN	WIRE #	WIRE COLOR	FUNCTION	WIRE AWG
1		WHITE		16 AWG
2		RED		16 AWG
3	DSW4	GRN/YLW	STATUS SW COMMON	16 AWG
4	DSBW4	ORANGE	STATUS SW OPEN	16 AWG
5	DSAW4	BLACK	STATUS SW CLOSED	16 AWG
6		BLUE		16 AWG

PT-1

CN11 PT-1 — CON-0011 / PT-1 / CONTROL CABINET

PIN	WIRE #	WIRE COLOR	FUNCTION	WIRE AWG
1	GND-7	GRN/YLW	GROUND	14 AWG
2	PX1	BLACK	120VAC H	14 AWG
3	PX2	WHITE	120VAC N	14 AWG

PT-2

CN11 PT-2 — CON-0011 / PT-2 / CONTROL CABINET

PIN	WIRE #	WIRE COLOR	FUNCTION	WIRE AWG
1	GND-8	GRN/YLW	GROUND	14 AWG
2	AX1	BLACK	120VAC H	14 AWG
3	AX2	WHITE	120VAC N	14 AWG

EATON CONFIDENTIAL

Powering Business Worldwide

1765 W. 160th STE 100
Broomfield, CO 80023

10 OF 11

PART NUMBER CA-20201-SCH

REV 1-01

CONNECTOR SCHEDULE- SWITCH TANK

WAY 1

CN24 W1 — CON-0024 / W1-STS / SWITCH TANK

PIN	WIRE #	WIRE COLOR	FUNCTION	WIRE AWG
1		WHITE		16 AWG
2		RED		16 AWG
3	DSW1	GRN/YLW	STATUS SW COMMON	16 AWG
4	DSBW1	ORANGE	STATUS SW OPEN	16 AWG
5	DSAW1	BLACK	STATUS SW CLOSED	16 AWG
6		BLUE		16 AWG

WAY 2

CN24 W2 — CON-0024 / W2-TNS / SWITCH TANK

PIN	WIRE #	WIRE COLOR	FUNCTION	WIRE AWG
1	M2T2	WHITE	TRIP COIL -	16 AWG
2	D2T2	RED	TRIP COIL +	16 AWG
3	DSW2	GRN/YLW	STATUS SW COMMON	16 AWG
4	DSBW2	ORANGE	STATUS SW OPEN	16 AWG
5	DSAW2	BLACK	STATUS SW CLOSED	16 AWG
6		BLUE		16 AWG

CN23 W2 — CON-0023 / W2-CT / SWITCH TANK

PIN	WIRE #	WIRE COLOR	FUNCTION	WIRE AWG
1	21	BLACK	A PHASE CT	14 AWG
2	22	WHITE	B PHASE CT	14 AWG
3	23	RED	C PHASE CT	14 AWG
4	20	GREEN	ABC CT COMMON	14 AWG

WAY 3

CN24 W3 — CON-0024 / W3-STS / SWITCH TANK

PIN	WIRE #	WIRE COLOR	FUNCTION	WIRE AWG
1		WHITE		16 AWG
2		RED		16 AWG
3	DSW3	GRN/YLW	STATUS SW COMMON	16 AWG
4	DSBW3	ORANGE	STATUS SW OPEN	16 AWG
5	DSAW3	BLACK	STATUS SW CLOSED	16 AWG
6		BLUE		16 AWG

WAY 4

CN24 W4 — CON-0024 / W4-STS / SWITCH TANK

PIN	WIRE #	WIRE COLOR	FUNCTION	WIRE AWG
1		WHITE		16 AWG
2		RED		16 AWG
3	DSW4	GRN/YLW	STATUS SW COMMON	16 AWG
4	DSBW4	ORANGE	STATUS SW OPEN	16 AWG
5	DSAW4	BLACK	STATUS SW CLOSED	16 AWG
6		BLUE		16 AWG

POTENTIAL TRANSFORMER CONNECTIONS

CAB-PT-1 — CAB-00__ / PT-1 / ENCLOSURE

PIN	WIRE #	WIRE COLOR	FUNCTION	WIRE AWG
1	GND-7	GRN/YLW	GROUND	14 AWG
2	PX1	BLACK	120VAC H	14 AWG
3	PX2	WHITE	120VAC N	14 AWG

CAB-PT-2 — CAB-00__ / PT-2 / ENCLOSURE

PIN	WIRE #	WIRE COLOR	FUNCTION	WIRE AWG
1	GND-8	GRN/YLW	GROUND	14 AWG
2	AX1	BLACK	120VAC H	14 AWG
3	AX2	WHITE	120VAC N	14 AWG

EATON CONFIDENTIAL

EATON
Powering Business Worldwide
1765 W. 160th STE 100
Broomfield, CO 80023

PART NUMBER CA-20201-SCH

REV 1-01

REPORT

24-2450 S

January 21, 2025

Explorations and Geotechnical Engineering Services

Proposed Food Innovation Center Building Addition
Rangeley Road
Orono, Maine

Prepared For:
The University of Maine System
Office of Facilities Management
Attention: Walter Shannon
5765 Service Building
Orono, ME 04469-5765

Prepared By:
S. W. Cole Engineering, Inc.
37 Liberty Drive
Bangor, ME 04401
Tel: (207) 848-5714

TABLE OF CONTENTS

1.0 INTRODUCTION 1
1.1 Scope and Purpose 1
1.2 Site and Proposed Construction 1
2.0 EXPLORATION AND TESTING 2
2.1 Explorations 2
2.2 Field Testing 2
2.3 Laboratory Testing 3
3.0 SUBSURFACE CONDITIONS 3
3.1 Soil 3
3.2 Groundwater 4
4.0 EVALUATION AND RECOMMENDATIONS 4
4.1 General Findings 4
4.2 Site and Subgrade Preparation 5
4.3 Excavation and Dewatering 5
4.4 Foundations 6
4.5 Foundation Drainage 6
4.6 Slab-On-Grade 7
4.7 Entrance Slabs, Sidewalks and Exterior Slabs 7
4.8 Backfill and Compaction 8
4.9 Paved Areas 9
4.10 Weather Considerations 10
4.11 Design Review and Construction Testing 10
5.0 CLOSURE 10

Appendix A Limitations
Appendix B Figures
Appendix C Exploration Logs & Key
Appendix D Laboratory Test Results

S.W.COLE ENGINEERING, INC.

www.swcole.com

24-2450 S

January 21, 2025

The University of Maine System
Office of Facilities Management
Attention: Walter Shannon
5765 Service Building
Orono, ME 04469-5765

Subject: Explorations and Geotechnical Engineering Services
Proposed Food Innovation Center Building Addition
Rangeley Road
Orono, Maine

Dear Walter:

In accordance with our Proposal, dated December 18, 2024, we have performed subsurface explorations for the subject project. This report summarizes our findings and geotechnical recommendations and its contents are subject to the limitations set forth in Appendix A.

1.0 INTRODUCTION

1.1 Scope and Purpose

The purpose of our services was to obtain subsurface information at the site in order to develop geotechnical recommendations relative to foundations, earthwork and pavement associated with the proposed construction. Our scope of services included test boring, test pit and ledge probe explorations, soils laboratory testing, a geotechnical analysis of the subsurface findings and preparation of this report.

1.2 Site and Proposed Construction

The site is located on the eastern side of the Keyo Building, located on the eastern side of Rangeley Road, at the University of Maine (UMaine) in Orono, Maine. The site generally consists of open grassed surfaced and paved parking areas with light tree growth. Based on the provided skematic Site Plan (Plan) from Harriman, dated January

10, 2025, we understand the site generally slopes downward from northeast to southwest from about elevation 140 to 130 feet (project datum).

Based on our conversations and the provided Plan, we understand development plans call for the construction of a new building addition for laboratory and classroom space. We understand the building addition will occupy a footprint of about 4,000 square feet. We anticipate the building will be a one-story masonry and steel framed structure supported by foundation walls and spread footing foundations with on-grade floor slabs. Details regarding proposed site grading and Finish Floor Elevation (FFE) are unknown; however, we anticipate the proposed FFE will be within about 1 foot of existing grades and match the first floor FFE of the Keyo Building, which includes basement areas. Additionally, we understand a new access drive is proposed on the southern side of the addition. Details regarding proposed structural loading are unknown at this time.

Proposed and existing site features are shown on the "Exploration Location Plan" attached in Appendix B.

2.0 EXPLORATION AND TESTING

2.1 Explorations

Six test borings (B-25-1 through B-25-6) and one ledge probe (P-25-1) were made at the site on January 2, 2025, by Seaboard Drilling, LLC. One test pit (TP-25-1) was made at the site on January 2, 2025, by The University of Maine System - Office of Facilities Management. The exploration locations were selected by Harriman, UMaine and S. W. Cole Engineering, Inc. (S.W.COLE) and established by S.W.COLE and UMaine. The exploration locations were subsequently located using a mapping grade GPS unit. The approximate exploration locations are shown on the "Exploration Location Plan" attached in Appendix B. Logs of the explorations and a key to the notes and symbols used on the logs are attached in Appendix C. The elevations shown on the logs were estimated based on topographic information shown on the "Exploration Location Plan."

2.2 Field Testing

The test borings were drilled using hollow-stem augers. The soils were sampled at 2-to-5-foot intervals using a split spoon sampler and Standard Penetration Testing (SPT) methods. SPT blow counts are shown on the logs.

2.3 Laboratory Testing

Soil samples obtained from the explorations were returned to our laboratory for further classification and testing. The results of one moisture content test are noted on the logs. The results of one grain size analysis are attached in Appendix D.

3.0 SUBSURFACE CONDITIONS

3.1 Soil

Below a surficial layer of topsoil or pavement, the explorations encountered a subsurface profile generally consisting of undocumented fill overlying glacial till. The principal strata encountered are summarized below.

Undocumented Fill: Underlying surficial topsoil or pavement, the test borings encountered undocumented fill to depths of about 2 to 6.5 feet which generally consisted of loose to medium dense sand and silt with varying portions of gravel and organics.

Glacial Till: Underlying the undocumented fill, the test borings encountered native glacial till generally consisting of medium dense to dense gravelly silt and sand with occasional cobbles. The test borings performed for the addition, B-25-1 through B-25-4, were terminated in glacial till at depths of about 17 feet. The test borings performed for the access drive, B-25-5 and B-25-6, were terminated in glacial till at depths of about 7 feet.

Ledge probe P-25-1 did not encounter a refusal surface and was terminated at a depth of about 10 feet.

Test pit TP-25-1 was performed adjacent to the existing building to expose and document the conditions of the existing foundation wall and footing. The exploration generally encountered granular foundation wall backfill materials to bottom of the footing, at a depth of about 9.5 feet below the existing grade. The continuous footing extended approximately 11 inches outward from the foundation wall. It should be noted the depths and widths are approximate based on the lack of a trench box creating the inability to safely measure at the bottom of the excavation. A sketch of the wall and footing is included in Appendix C.

Not all the strata were encountered at each exploration; refer to the attached logs for more detailed subsurface information.

3.2 Groundwater

Free water was not observed at the explorations during the time of the exploration work. Groundwater likely becomes perched on the relatively impervious undocumented fill and glacial till encountered at the explorations. Long term groundwater information is not available. It should be anticipated that groundwater levels will fluctuate, particularly in response to periods of snowmelt and precipitation, as well as changes in site use.

4.0 EVALUATION AND RECOMMENDATIONS

4.1 General Findings

Based on the subsurface findings, the proposed construction appears feasible from a geotechnical standpoint. The principal geotechnical considerations include:

- Undocumented fills extending to depths of about 2 to 6.5 feet were encountered at the boring locations and may extend to deeper depths elsewhere at the site. We recommend undocumented fills be removed within the building addition footprint and backfilled with compacted Granular Borrow or Structural Fill.

- Following removal of fills below the building addition footprint, spread footing foundations and slab-on-grade floors bearing on properly prepared subgrades appear suitable for the proposed building addition. Spread footings should bear on new Granular Borrow or Structural Fill overlying native glacial till or at least 6 inches of compacted Crushed Stone wrapped in geotextile fabric overlying native glacial till.

- Subgrades across the site will consist of moisture-sensitive glacial till. Earthwork and grading activities should occur during drier, non-freezing weather of Spring, Summer or Fall. Rubber tired construction equipment should not operate directly on the native soils when wet.

- Imported Granular Borrow, Structural Fill and Crushed Stone will be needed for construction. The undocumented fill and glacial till soils are unsuitable for reuse below the proposed building addition or as backfill for foundations, however they may be utilized in landscape areas, if needed.

4.2 Site and Subgrade Preparation

We recommend site preparation begin with the construction of an erosion control system to protect adjacent drainage ways and areas outside the construction limits. Existing fills and soils with organics must be completely removed below the proposed building addition footprint. As much vegetation as possible should remain outside the construction areas to lessen the potential for erosion and site disturbance.

Building Pad and Footings: As discussed, the site was previously developed and filled, undocumented fills were encountered at the site extending to depths ranging from about 2 to 6.5 feet and may extend deeper in areas not explored. Existing fills must be completely removed from beneath the proposed building addition footprint. The extent of removal should extend 1 foot laterally outward from the outside edge of perimeter footings for every 1-foot of excavation depth (1H:1V bearing splay). The over-excavated areas should be backfilled with compacted Granular Borrow or Structural Fill.

In general, subgrades for the proposed foundation construction will consist of native glacial till or new compacted fills overlying glacial till. We recommend that excavation to subgrades be completed with a smooth-edged bucket to lessen disturbance of subgrade soils. We recommend that foundations bearing on native glacial till be underlain with 6 inches of compacted Crushed Stone wrapped in a geotextile fabric.

Paved Areas: Where encountered, we recommend undocumented fills encountered beneath proposed paved areas be removed to a depth of at least 1 foot below pavement gravels and replaced with compacted Granular Borrow. Where undocumented fills remain, we recommend the subgrade be densified by proof-rolling with at least 3 passes of a minimum 10-ton vibratory roller compactor prior to placing Granular Borrow or subbase gravel. Areas that become soft or continue to yield after proof-rolling should be removed and replaced with compacted Granular Borrow. If encountered, organics should be completely removed and replaced.

4.3 Excavation and Dewatering

Excavations will generally encounter surficial topsoil and pavement, undocumented fills and glacial till. Care must be exercised during construction to limit disturbance of the bearing soils. Earthwork and grading activities should occur during drier, non-freezing weather of Spring, Summer and Fall. Rubber tired construction equipment should not

operate directly on the native soils when wet. Final cuts to subgrades should be performed with a smooth-edged bucket to help reduce strength loss from soil disturbance. Sumping and pumping dewatering techniques should be adequate to control groundwater in excavations. Controlling the water levels to at least one foot below planned excavation depths will help stabilize subgrades during construction. Excavations must be properly shored or sloped in accordance with OSHA Regulations to prevent sloughing and caving of the sidewalls during construction. Care must be taken to preclude undermining adjacent structures, utilities and roadways. The design and planning of excavations, excavation support systems, and dewatering is the responsibility of the contractor.

4.4 Foundations

Foundations for the proposed building addition should be cast on 6 inches of compacted Crushed Stone wrapped in a geotextile fabric overlying native glacial till or Granular Borrow or Structural Fill overlying native glacial till. For foundations bearing on properly prepared subgrades, we recommend the following geotechnical parameters for design consideration:

Geotechnical Parameters for Spread Footings and Foundation Walls	
Design Frost Depth	5 feet
Net Allowable Soil Bearing Pressure	4 ksf
Base Friction Factor	0.35
Total Unit Weight of Backfill (compacted Structural Fill)	130 pcf
Internal Friction Angle of Backfill (compacted Structural Fill)	30°
At-Rest Lateral Earth Pressure Coefficient	0.5
Seismic Soil Site Class (2015 IBC, N-value method)	C
Estimated Total Settlement	1-inch
Differential Settlement	½-inch over 40 feet

4.5 Foundation Drainage

We recommend an underdrain system be installed on the outside edge of perimeter footings. The underdrain pipe should consist of 4-inch diameter, perforated SDR-35 foundation drainpipe bedded in Crushed Stone and wrapped in non-woven geotextile fabric such as Mirafi 180N or equivalent. The underdrain pipe must have a positive gravity outlet protected from freezing, clogging and backflow. Surface grades should be sloped away from the building for positive surface water drainage. A general foundation detail sketch is attached in Appendix B.

4.6 Slab-On-Grade

On-grade floor slabs in heated areas may be designed using a subgrade reaction modulus of 140 pci (pounds per cubic inch) provided the slab is underlain by at least 12 inches of compacted Structural Fill placed over properly prepared subgrades. The structural engineer or concrete consultant must design steel reinforcing and joint spacing appropriate to slab thickness and function, as well as control of shrinkage cracking and slab curling.

We recommend a sub-slab vapor retarder be installed below floor slabs. The vapor retarder must have a permeance that is less than the floor cover or surface treatment that is applied to the slab. The vapor retarder must have sufficient durability to withstand direct contact with the sub-slab base material and construction activity. The vapor retarder material should be placed according to the manufacturer's recommended method, including the taping and lapping of all joints and wall connections. The architect and/or flooring consultant should select the vapor retarder products compatible with flooring and adhesive materials.

The floor slab should be appropriately cured using moisture retention methods after casting. Typical floor slab curing methods should be used for at least 7 days. The architect or flooring consultant should assign curing methods consistent with current applicable American Concrete Institute (ACI) procedures with consideration of curing method compatibility to proposed surface treatments, flooring and adhesive materials.

4.7 Entrance Slabs, Sidewalks and Exterior Slabs

Entrance slabs and sidewalks adjacent to the building addition must be designed to reduce the effects of differential frost action between adjacent pavement, doorways, and entrances. We recommend that non-frost susceptible Structural Fill be provided to a depth of at least 5 feet below the top of entrance slabs. This thickness of Structural Fill should extend the full width of the entrance slab and outward at least 5 feet, thereafter, transitioning up to the bottom of the adjacent sidewalk or pavement gravels at a 3H:1V or flatter slope. General details of this frost transition zone are shown on the "Foundation Detail Sketch" attached in Appendix B.

4.8 Backfill and Compaction

We recommend the following fill and backfill materials: recycled products must also be tested in accordance with applicable environmental regulations and approved by a qualified environmental consultant.

Common Borrow: Fill to raise grades in landscape areas should be non-organic compactable earth meeting the requirements of 2020 MaineDOT Standard Specification 703.18 Common Borrow.

Granular Borrow: Fill to raise grade and backfill for over-excavations should consist of sand, silty sand or sand and gravel meeting the requirements of 2020 Maine Department of Transportation (MaineDOT) Standard Specification 703.19 Granular Borrow.

Structural Fill: Backfill for over-excavations and foundations, slab base material, and material below exterior entrances slabs should be clean, non-frost susceptible sand and gravel meeting the gradation requirements for Structural Fill as given below:

Structural Fill	
Sieve Size	**Percent Finer by Weight**
4 inch	100
3 inch	90 to 100
¼ inch	25 to 90
#40	0 to 30
#200	0 to 6

Crushed Stone: Crushed Stone, used below foundations and for underdrain aggregate, should meet the requirements of 2020 MaineDOT Standard Specification 703.13 Crushed Stone ¾-Inch.

Reuse of Site Soils: The undocumented fill and glacial till are unsuitable for reuse below the proposed building addition or as backfill for foundations, however they may be utilized in landscape areas, if needed.

Placement and Compaction: Fill should be placed in horizontal lifts and compacted such that the desired density is achieved throughout the lift thickness with 3 to 5 passes of the compaction equipment. Loose lift thicknesses for grading fill, and backfill

activities should not exceed 12 inches. We recommend that fill and backfill be compacted to at least 95 percent of its maximum dry density as determined by ASTM D-1557. Crushed Stone should be compacted with 3 to 5 passes of a vibratory plate compactor having a static weight of at least 500 pounds.

4.9 Paved Areas

We anticipate paved areas will be subjected primarily to passenger vehicle and light delivery truck traffic with occasional heavy delivery truck traffic. Considering the site soils, and proposed usage, we offer the following pavement section for consideration.

FLEXIBLE (HMA) PAVEMENT SECTION 2020 MaineDOT Standard Specs	
Pavement Layer	**Material Thickness**
MaineDOT 9.5 mm Hot Mix Asphalt	1 ½ inches
MaineDOT 19.0 mm Hot Mix Asphalt	2 ½ inches
MaineDOT 703.06 Aggregate Base Type A	6 inches
MaineDOT 703.06 Aggregate Subbase Type D	15 inches
MaineDOT 703.19 Granular Borrow	12 inches**
** NOTE: Underlain by densified non-organic fills, where present	

The base and subbase materials should be compacted to at least 95 percent of their maximum dry density as determined by ASTM D-1557. Hot mix asphalt pavement should be compacted to 92 to 97 percent of its theoretical maximum density as determined by ASTM D-2041. A tack coat should be used between successive lifts of bituminous pavement.

We recommend pavement gravels be positively drained by daylighting to ditches or installation of underdrains. Consideration should be given to the development of both surface and subgrade drainage. Paved areas should be graded to promote surface drainage away from the buildings and design should consider sloping of the subgrade to enhance drainage.

It should be understood that frost penetration can be on the order of 5 feet in this area. In the absence of full depth excavation of frost susceptible soils below paved areas and subsequent replacement with non-frost susceptible compacted fill or adequate drainage of roadway base and subbase gravel, frost penetration into the subgrade will occur and some heaving and distress of pavement must be anticipated.

4.10 Weather Considerations

The site soils are moisture-sensitive and therefore, construction activity should be limited during wet and freezing weather and the site soils may require drying before construction activities may continue. The contractor should anticipate the need for water to temper fills in order to facilitate compaction during dry weather. If construction takes place during cold weather, subgrades and foundations must be protected during freezing conditions. Concrete and fill must not be placed on frozen soil; and once placed, the concrete and soil beneath the structure must be protected from freezing.

4.11 Design Review and Construction Testing

S.W.COLE should be retained to review the construction documents to determine that our earthwork, foundation and pavement recommendations have been properly interpreted and implemented.

A construction materials testing and quality assurance program should be implemented during construction to observe compliance with the design concepts, plans, and specifications. S.W.COLE is available to observe earthwork activities including over-excavation operations and the preparation of foundation bearing surfaces, as well as to provide testing and IBC Special Inspection services for soils, concrete, masonry, fireproofing and asphalt construction materials.

5.0 CLOSURE

It has been a pleasure to be of assistance to you with this phase of your project. We look forward to working with you during the construction phase of the project.

Sincerely,

S. W. Cole Engineering, Inc.

Nathan D. Strout, P.E.
Senior Geotechnical Engineer

NDS:rec

STATE OF MAINE
NATHAN D. STROUT
No. 13928
LICENSED
PROFESSIONAL ENGINEER

APPENDIX A

Limitations

This report has been prepared for the exclusive use of the University of Maine System - Office of Facilities Management for specific application to the proposed Food Innovation Center Building Addition on Rangeley Road in Orono, Maine. S. W. Cole Engineering, Inc. (S.W.COLE) has endeavored to conduct our services in accordance with generally accepted soil and foundation engineering practices. No warranty, expressed or implied, is made.

The soil profiles described in the report are intended to convey general trends in subsurface conditions. The boundaries between strata are approximate and are based upon interpretation of exploration data and samples.

The analyses performed during this investigation and recommendations presented in this report are based in part upon the data obtained from subsurface explorations made at the site. Variations in subsurface conditions may occur between explorations and may not become evident until construction. If variations in subsurface conditions become evident after submission of this report, it will be necessary to evaluate their nature and to review the recommendations of this report.

Observations have been made during exploration work to assess site groundwater levels. Fluctuations in water levels will occur due to variations in rainfall, temperature, and other factors.

S.W.COLE's scope of services has not included the investigation, detection, or prevention of any Biological Pollutants at the project site or in any existing or proposed structure at the site. The term "Biological Pollutants" includes, but is not limited to, molds, fungi, spores, bacteria, and viruses, and the byproducts of any such biological organisms.

Recommendations contained in this report are based substantially upon information provided by others regarding the proposed project. In the event that any changes are made in the design, nature, or location of the proposed project, S.W.COLE should review such changes as they relate to analyses associated with this report. Recommendations contained in this report shall not be considered valid unless the changes are reviewed by S.W.COLE.

APPENDIX B

Figures

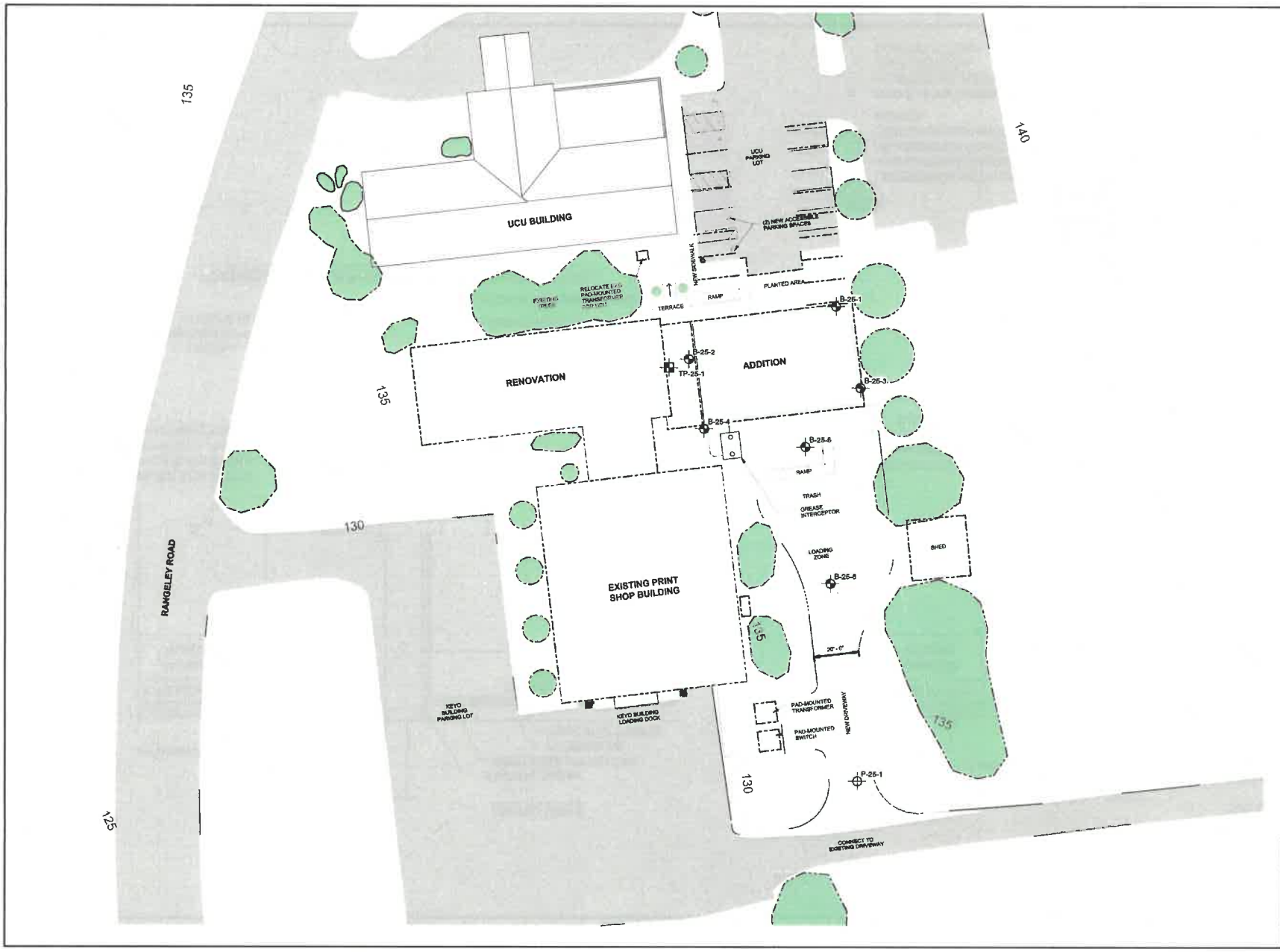

LEGEND:

- APPROXIMATE BORING LOCATION
- APPROXIMATE TEST PIT LOCATION
- APPROXIMATE PROBE LOCATION

NOTES:

1. EXPLORATION LOCATION PLAN WAS PREPARED FROM A 1"=20' SCALE PLAN OF THE SITE TITLED "SITE PLAN," PREPARED BY HARRIMAN, DATED 01/10/2025.
2. THE EXPLORATION LOCATIONS WERE SELECTED BY HARRIMAN AND S. W. COLE ENGINEERING, INC. (S.W.COLE) AND SUBSEQUENTLY ESTABLISHED IN THE FIELD BY S.W.COLE USING A MAPPING GRADE GNSS RECEIVER.
3. THIS PLAN SHOULD BE USED IN CONJUNCTION WITH THE ASSOCIATED S. W. COLE ENGINEERING, INC. GEOTECHNICAL REPORT.
4. THE PURPOSE OF THIS PLAN IS ONLY TO DEPICT THE LOCATION OF THE EXPLORATIONS IN RELATION TO THE EXISTING CONDITIONS AND PROPOSED CONSTRUCTION AND IS NOT TO BE USED FOR CONSTRUCTION.

0 20 40 FEET

S.W.COLE ENGINEERING, INC

THE UNIVERSITY OF MAINE SYSTEM
OFFICE OF FACILITIES MANAGEMENT

EXPLORATION LOCATION PLAN

PROPOSED FOOD INNOVATION CENTER BUILDING ADDITION
RANGELEY ROAD, ORONO, MAINE

Job No.:	24-2450	Scale:	1" = 20'
Date:	01/19/2025	Sheet	1

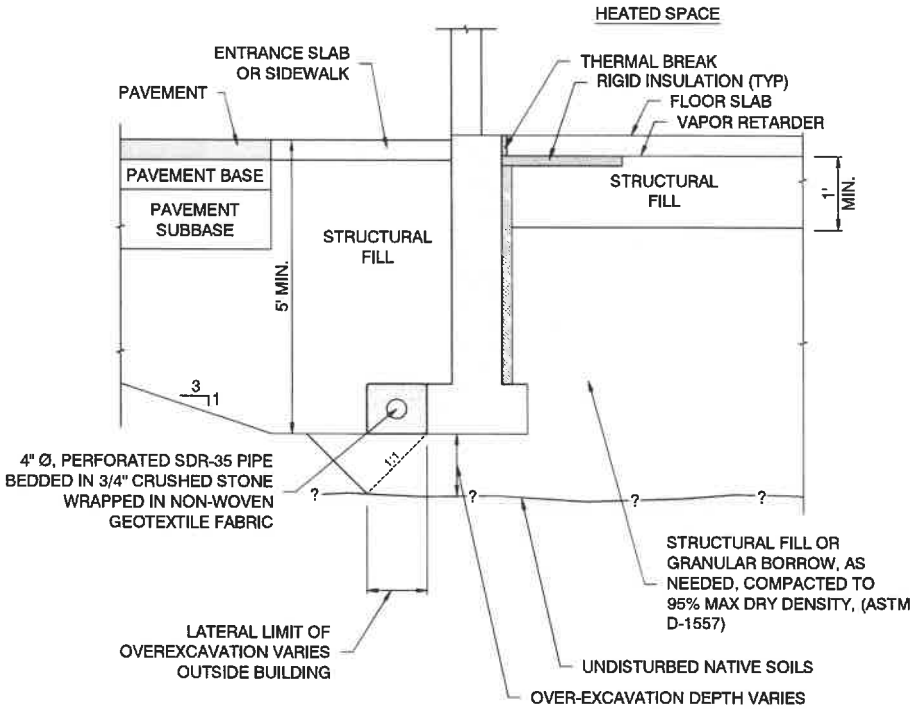

FOUNDATIONS BEARING ON COMPACTED FILL

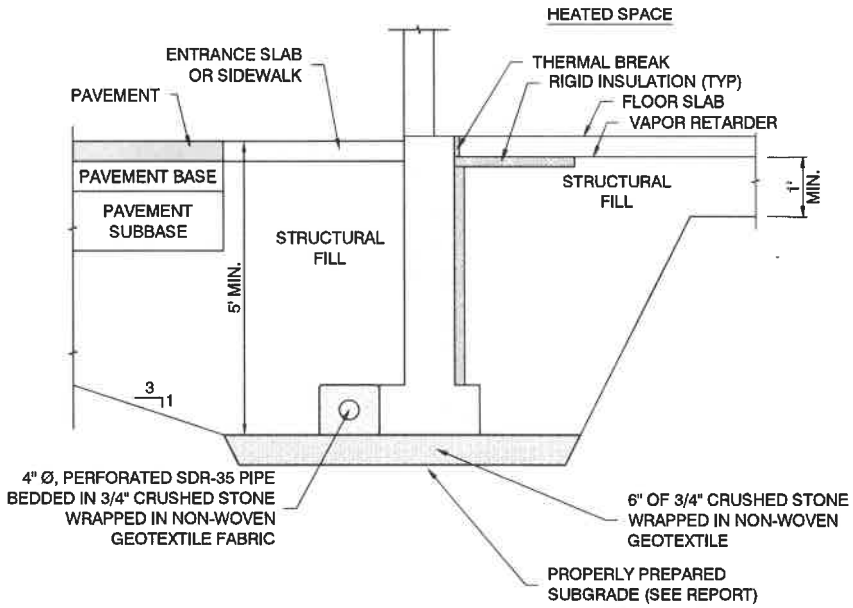

FOUNDATIONS BEARING ON NATIVE SOILS

NOTE:

1. UNDERDRAIN INSTALLATION AND MATERIAL GRADATION RECOMMENDATIONS ARE CONTAINED WITHIN THIS REPORT.
2. DETAIL IS PROVIDED FOR ILLUSTRATIVE PURPOSES ONLY, NOT FOR CONSTRUCTION.

S.W.COLE ENGINEERING, INC.

THE UNIVERSITY OF MAINE SYSTEM
OFFICE OF FACILITIES MANAGEMENT

FOUNDATION DETAIL SKETCH

PROPOSED FOOD INNOVATION CENTER BUILDING ADDITION
RANGELEY ROAD, ORONO, MAINE

Job No.:	24-2450	Scale:	Not to Scale
Date :	01/15/2025	Sheet:	2

APPENDIX C

Exploration Logs and Key

BORING LOG

S.W.COLE

CLIENT: The University of Maine System Office of Facilities Management
PROJECT: Proposed Food Innovation Center Building Addition
LOCATION: Rangeley Road, Orono, Maine

BORING NO.: B-25-1
SHEET: 1 of 1
PROJECT NO. 24-2450
DATE START: 1/2/2025
DATE FINISH: 1/2/2025

Drilling Information

LOCATION: See Exploration Location Plan
ELEVATION (FT): 136' +/-
TOTAL DEPTH (FT): 17.0
LOGGED BY: Alex Allen
DRILLING CO.: Seaboard Drilling, LLC
DRILLER: Ryan Hackett
DRILLING METHOD: Hollow Stem Auger
RIG TYPE: Track Mounted Diedrich D-50
AUGER ID/OD: 2 1/4 in / 5 5/8 in
SAMPLER: Standard Split-Spoon
HAMMER TYPE: Automatic
HAMMER WEIGHT (lbs): 140
CASING ID/OD: N/A /N/A
CORE BARREL: N/A
HAMMER CORRECTION FACTOR: 1.47
HAMMER DROP (inch): 30
WATER LEVEL DEPTHS (ft): No free water observed
GENERAL NOTES:

KEY TO NOTES AND SYMBOLS:
Water Level: ▽ At time of Drilling; ▼ At Completion of Drilling; ▼ After Drilling
D = Split Spoon Sample; U = Thin Walled Tube Sample; R = Rock Core Sample; V = Field Vane Shear
Pen. = Penetration Length; Rec. = Recovery Length; bpf = Blows per Foot; mpf = Minute per Foot
WOR = Weight of Rods; WOH = Weight of Hammer; RQD = Rock Quality Designation; PID = Photoionization Detector
S_v = Field Vane Shear Strength, kips/sq.ft.; q_u = Unconfined Compressive Strength, kips/sq.ft.; Ø = Friction Angle (Estimated); N/A = Not Applicable

Elev. (ft)	Depth (ft)	Casing Pen. (bpf)	Sample No.	Type	Depth (ft)	Pen./ Rec. (in)	Blow Count or RQD	Field / Lab Test Data	Graphic Log	Sample Description & Classification	H_2O Depth	Remarks
			1D		0.3-2.3	24/12	8-5-2-4			0.3 Bituminous Pavement Medium dense, brown gravelly silty SAND (FILL)		
135			2D		2.3-4.1	21/10	5-5-24-50/3"			2.0 Medium dense to very dense, brown gravelly SILT and SAND with occasional cobbles (Glacial Till)		
	5		3D		5-7	24/20	16-21-30-47					
130												
	10		4D		10-12	24/16	37-29-27-32					
125												
	15		5D		15-17	24/8	11-15-17-26					
120												

Bottom of Exploration at 17.0 feet

Stratification lines represent approximate boundary between soil types, transitions may be gradual. Water level readings have been made at times and under conditions stated. Fluctuations of groundwater may occur due to other factors than those present at the time measurements were made.

BORING / WELL 10-12-2022 24-2450.GPJ SWCE TEMPLATE.GDT 1/20/25

BORING LOG

S.W.COLE

CLIENT: The University of Maine System Office of Facilities Management
PROJECT: Proposed Food Innovation Center Building Addition
LOCATION: Rangeley Road, Orono, Maine

BORING NO.: B-25-2
SHEET: 1 of 1
PROJECT NO. 24-2450
DATE START: 1/2/2025
DATE FINISH: 1/2/2025

Drilling Information

LOCATION: See Exploration Location Plan
ELEVATION (FT): 136' +/-
TOTAL DEPTH (FT): 17.0
LOGGED BY: Alex Allen
DRILLING CO.: Seaboard Drilling, LLC
DRILLER: Ryan Hackett
DRILLING METHOD: Hollow Stem Auger
RIG TYPE: Track Mounted Diedrich D-50
AUGER ID/OD: 2 1/4 in / 5 5/8 in
SAMPLER: Standard Split-Spoon
HAMMER TYPE: Automatic
HAMMER WEIGHT (lbs): 140
CASING ID/OD: N/A /N/A
CORE BARREL: N/A
HAMMER CORRECTION FACTOR: 1.47
HAMMER DROP (inch): 30
WATER LEVEL DEPTHS (ft): No free water observed
GENERAL NOTES:

KEY TO NOTES AND SYMBOLS:
Water Level: ∇ At time of Drilling; ▼ At Completion of Drilling; ▼ After Drilling
D = Split Spoon Sample; U = Thin Walled Tube Sample; R = Rock Core Sample; V = Field Vane Shear
Pen. = Penetration Length; Rec. = Recovery Length; bpf = Blows per Foot; mpf = Minute per Foot
WOR = Weight of Rods; WOH = Weight of Hammer; RQD = Rock Quality Designation; PID = Photoionization Detector
S_v = Field Vane Shear Strength, kips/sq.ft.; q_u = Unconfined Compressive Strength, kips/sq.ft.; Ø = Friction Angle (Estimated); N/A = Not Applicable

Elev. (ft)	Depth (ft)	Casing Pen. (bpf)	Sample No.	Type	Depth (ft)	Pen./ Rec. (in)	Blow Count or RQD	Field / Lab Test Data	Graphic Log	Sample Description & Classification	H_2O Depth	Remarks
			1D		0-2	24/10	2-2-3-6			0.3 Topsoil Medium dense to loose, brown gravelly silty SAND with trace organics (Fill)		
135												
			2D		2-4	24/8	4-6-3-2					
	5		3D		5-7	24/10	3-2-3-11					
130										6.5 Dense, brown gravelly SILT and SAND with occasional cobbles (Glacial Till)		
	10		4D		10-12	24/20	16-18-19-24					
125												
	15		5D		15-17	24/16	16-23-18-14					
120												

Bottom of Exploration at 17.0 feet

Stratification lines represent approximate boundary between soil types, transitions may be gradual. Water level readings have been made at times and under conditions stated. Fluctuations of groundwater may occur due to other factors than those present at the time measurements were made.

BORING / WELL 10-12-2022 24-2450.GPJ SWCE TEMPLATE.GDT 1/20/25

BORING LOG

S.W.COLE

CLIENT: The University of Maine System Office of Facilities Management
PROJECT: Proposed Food Innovation Center Building Addition
LOCATION: Rangeley Road, Orono, Maine

BORING NO.: B-25-3
SHEET: 1 of 1
PROJECT NO. 24-2450
DATE START: 1/2/2025
DATE FINISH: 1/2/2025

Drilling Information

LOCATION: See Exploration Location Plan
ELEVATION (FT): 136' +/-
TOTAL DEPTH (FT): 17.0
LOGGED BY: Alex Allen
DRILLING CO.: Seaboard Drilling, LLC
DRILLER: Ryan Hackett
DRILLING METHOD: Hollow Stem Auger
RIG TYPE: Track Mounted Diedrich D-50
AUGER ID/OD: 2 1/4 in / 5 5/8 in
SAMPLER: Standard Split-Spoon
HAMMER TYPE: Automatic
HAMMER WEIGHT (lbs): 140
CASING ID/OD: N/A /N/A
CORE BARREL: N/A
HAMMER CORRECTION FACTOR: 1.47
HAMMER DROP (inch): 30
WATER LEVEL DEPTHS (ft): No free water observed
GENERAL NOTES:

KEY TO NOTES AND SYMBOLS:
Water Level: ▽ At time of Drilling; ▼ At Completion of Drilling; ▼ After Drilling
D = Split Spoon Sample; U = Thin Walled Tube Sample; R = Rock Core Sample; V = Field Vane Shear
Pen. = Penetration Length; Rec. = Recovery Length; bpf = Blows per Foot; mpf = Minute per Foot
WOR = Weight of Rods; WOH = Weight of Hammer; RQD = Rock Quality Designation; PID = Photoionization Detector
S_v = Field Vane Shear Strength, kips/sq.ft.; q_u = Unconfined Compressive Strength, kips/sq.ft.; Ø = Friction Angle (Estimated); N/A = Not Applicable

Elev. (ft)	Depth (ft)	Casing Pen. (bpf)	Sample No.	Type	Depth (ft)	Pen./ Rec. (in)	Blow Count or RQD	Field / Lab Test Data	Graphic Log	Sample Description & Classification	H_2O Depth	Remarks
			1D		0-2	24/14	2-2-1-2			0.3 Topsoil Loose, brown sandy SILT, some gravel (Fill)		
135			2D		2-4	24/16	8-9-11-12			2.0 Medium dense to very dense, brown gravelly SILT and SAND with occasional cobbles (Glacial Till)		
	5		3D		5-7	24/20	22-25-32-44	ID 31063B w =9.5 %				
130												
	10		4D		10-12	24/20	18-25-27-26					
125												
	15		5D		15-17	24/24	10-13-17-26					
120												

Bottom of Exploration at 17.0 feet

Stratification lines represent approximate boundary between soil types, transitions may be gradual. Water level readings have been made at times and under conditions stated. Fluctuations of groundwater may occur due to other factors than those present at the time measurements were made.

BORING / WELL 10-12-2022 24-2450.GPJ SWCE TEMPLATE.GDT 1/20/25

BORING LOG

S.W.COLE

CLIENT: The University of Maine System Office of Facilities Management
PROJECT: Proposed Food Innovation Center Building Addition
LOCATION: Rangeley Road, Orono, Maine

BORING NO.: B-25-4
SHEET: 1 of 1
PROJECT NO. 24-2450
DATE START: 1/2/2025
DATE FINISH: 1/2/2025

Drilling Information

LOCATION: See Exploration Location Plan
ELEVATION (FT): 136' +/-
TOTAL DEPTH (FT): 17.0
LOGGED BY: Alex Allen
DRILLING CO.: Seaboard Drilling, LLC
DRILLER: Ryan Hackett
DRILLING METHOD: Hollow Stem Auger
RIG TYPE: Track Mounted Diedrich D-50
AUGER ID/OD: 2 1/4 in / 5 5/8 in
SAMPLER: Standard Split-Spoon
HAMMER TYPE: Automatic
HAMMER WEIGHT (lbs): 140
CASING ID/OD: N/A /N/A
CORE BARREL: N/A
HAMMER CORRECTION FACTOR: 1.47
HAMMER DROP (inch): 30
WATER LEVEL DEPTHS (ft): No free water observed
GENERAL NOTES:

KEY TO NOTES AND SYMBOLS:
Water Level: ▽ At time of Drilling; ▼ At Completion of Drilling; ▼ After Drilling
D = Split Spoon Sample; U = Thin Walled Tube Sample; R = Rock Core Sample; V = Field Vane Shear
Pen. = Penetration Length; Rec. = Recovery Length; bpf = Blows per Foot; mpf = Minute per Foot
WOR = Weight of Rods; WOH = Weight of Hammer; RQD = Rock Quality Designation; PID = Photoionization Detector
S_v = Field Vane Shear Strength, kips/sq.ft.; q_u = Unconfined Compressive Strength, kips/sq.ft.; Ø = Friction Angle (Estimated); N/A = Not Applicable

Elev. (ft)	Depth (ft)	Casing Pen. (bpf)	Sample No.	Type	Depth (ft)	Pen./ Rec. (in)	Blow Count or RQD	Field / Lab Test Data	Graphic Log	Sample Description & Classification	H_2O Depth	Remarks
			1D		0-2	24/10	2-2-4-3			0.3 Topsoil		
135										Loose, brown gravelly SAND and SILT with trace organics (Fill)		
			2D		2-4	24/10	3-4-2-4					
	5		3D		5-7	24/6	2-2-8-13					
130										6.0 Dense, brown gravelly SILT and SAND with occasional cobbles (Glacial Till)		
	10		4D		10-12	24/16	17-20-25-30					
125												
	15		5D		15-17	24/20	17-25-38-30					
120												

Bottom of Exploration at 17.0 feet

Stratification lines represent approximate boundary between soil types, transitions may be gradual. Water level readings have been made at times and under conditions stated. Fluctuations of groundwater may occur due to other factors than those present at the time measurements were made.

BORING / WELL 10-12-2022 24-2450.GPJ SWCE TEMPLATE.GDT 1/20/25

BORING LOG

S.W.COLE

CLIENT: The University of Maine System Office of Facilities Management
PROJECT: Proposed Food Innovation Center Building Addition
LOCATION: Rangeley Road, Orono, Maine

BORING NO.: B-25-5
SHEET: 1 of 1
PROJECT NO. 24-2450
DATE START: 1/2/2025
DATE FINISH: 1/2/2025

Drilling Information

LOCATION: See Exploration Location Plan
ELEVATION (FT): 135' +/-
TOTAL DEPTH (FT): 7.0
LOGGED BY: Alex Allen
DRILLING CO.: Seaboard Drilling, LLC
DRILLER: Ryan Hackett
DRILLING METHOD: Hollow Stem Auger
RIG TYPE: Track Mounted Diedrich D-50
AUGER ID/OD: 2 1/4 in / 5 5/8 in
SAMPLER: Standard Split-Spoon
HAMMER TYPE: Automatic
HAMMER WEIGHT (lbs): 140
CASING ID/OD: N/A /N/A
CORE BARREL: N/A
HAMMER CORRECTION FACTOR: 1.47
HAMMER DROP (inch): 30
WATER LEVEL DEPTHS (ft): No free water observed
GENERAL NOTES:

KEY TO NOTES AND SYMBOLS:
Water Level: ▽ At time of Drilling; ▼ At Completion of Drilling; ▼ After Drilling
D = Split Spoon Sample; U = Thin Walled Tube Sample; R = Rock Core Sample; V = Field Vane Shear
Pen. = Penetration Length; Rec. = Recovery Length; bpf = Blows per Foot; mpf = Minute per Foot
WOR = Weight of Rods; WOH = Weight of Hammer; RQD = Rock Quality Designation; PID = Photoionization Detector
S_v = Field Vane Shear Strength, kips/sq.ft.; q_u = Unconfined Compressive Strength, kips/sq.ft.; Ø = Friction Angle (Estimated); N/A = Not Applicable

Elev. (ft)	Depth (ft)	Casing Pen. (bpf)	Sample No.	Type	Depth (ft)	Pen./ Rec. (in)	Blow Count or RQD	Field / Lab Test Data	Graphic Log	Sample Description & Classification	H_2O Depth	Remarks
			1D		0-2	24/6	2-1-3-3			0.3 Topsoil Loose, brown sandy SILT, some gravel (probable Fill)		
										3.0 Very dense, brown gravelly SILT and SAND (Glacial Till)		
130	5		2D		5-7	24/22	14-26-29-32					

Bottom of Exploration at 7.0 feet

Stratification lines represent approximate boundary between soil types, transitions may be gradual. Water level readings have been made at times and under conditions stated. Fluctuations of groundwater may occur due to other factors than those present at the time measurements were made.

BORING / WELL 10-12-2022 24-2450.GPJ SWCE TEMPLATE.GDT 1/20/25

BORING LOG

S.W.COLE

CLIENT: The University of Maine System Office of Facilities Management
PROJECT: Proposed Food Innovation Center Building Addition
LOCATION: Rangeley Road, Orono, Maine

BORING NO.: B-25-6
SHEET: 1 of 1
PROJECT NO. 24-2450
DATE START: 1/2/2025
DATE FINISH: 1/2/2025

Drilling Information

LOCATION: See Exploration Location Plan
ELEVATION (FT): 133' +/-
TOTAL DEPTH (FT): 7.0
LOGGED BY: Alex Allen
DRILLING CO.: Seaboard Drilling, LLC
DRILLER: Ryan Hackett
DRILLING METHOD: Hollow Stem Auger
RIG TYPE: Track Mounted Diedrich D-50
AUGER ID/OD: 2 1/4 in / 5 5/8 in
SAMPLER: Standard Split-Spoon
HAMMER TYPE: Automatic
HAMMER WEIGHT (lbs): 140
CASING ID/OD: N/A /N/A
CORE BARREL: N/A
HAMMER CORRECTION FACTOR: 1.47
HAMMER DROP (inch): 30
WATER LEVEL DEPTHS (ft): No free water observed
GENERAL NOTES:

KEY TO NOTES AND SYMBOLS:

Water Level
- At time of Drilling
- At Completion of Drilling
- After Drilling

D = Split Spoon Sample
U = Thin Walled Tube Sample
R = Rock Core Sample
V = Field Vane Shear

Pen. = Penetration Length
Rec. = Recovery Length
bpf = Blows per Foot
mpf = Minute per Foot

WOR = Weight of Rods
WOH = Weight of Hammer
RQD = Rock Quality Designation
PID = Photoionization Detector

S_v = Field Vane Shear Strength, kips/sq.ft.
q_u = Unconfined Compressive Strength, kips/sq.ft.
Ø = Friction Angle (Estimated)
N/A = Not Applicable

Elev. (ft)	Depth (ft)	Casing Pen. (bpf)	Sample No.	Type	Depth (ft)	Pen./ Rec. (in)	Blow Count or RQD	Field / Lab Test Data	Graphic Log	Sample Description & Classification	H_2O Depth	Remarks
			1D		0-2	24/6	2-2-3-2			0.3 Topsoil Loose, brown sandy SILT, some gravel (probable Fill)		
130										3.0 Very dense, brown gravelly SILT and SAND (Glacial Till)		
	5		2D		5-7	24/22	11-16-19-22					

Bottom of Exploration at 7.0 feet

Stratification lines represent approximate boundary between soil types, transitions may be gradual. Water level readings have been made at times and under conditions stated. Fluctuations of groundwater may occur due to other factors than those present at the time measurements were made.

BORING / WELL 10-12-2022 24-2450.GPJ SWCE TEMPLATE.GDT 1/20/25

TEST PIT LOG

CLIENT: The University of Maine System - Office of Facilities Management
PROJECT: Proposed Food Innovation Center Building Addition
LOCATION: Rangeley Road, Orono, Maine

PROJECT NO.: 24-2450
LOGGED BY: Alex Allen
CONTRACTOR: UMaine - FM
EQUIPMENT: CAT Backhoe

TEST PIT TP-25-1

DATE: 1/2/2025 **LOCATION:** See Exploration Location Plan **SURFACE ELEVATION (FT):** 136' +/- **COMPLETION DEPTH (FT):** 9.5'
WATER LEVEL DEPTHS (FT): No Free Water Observed **REMARKS:**

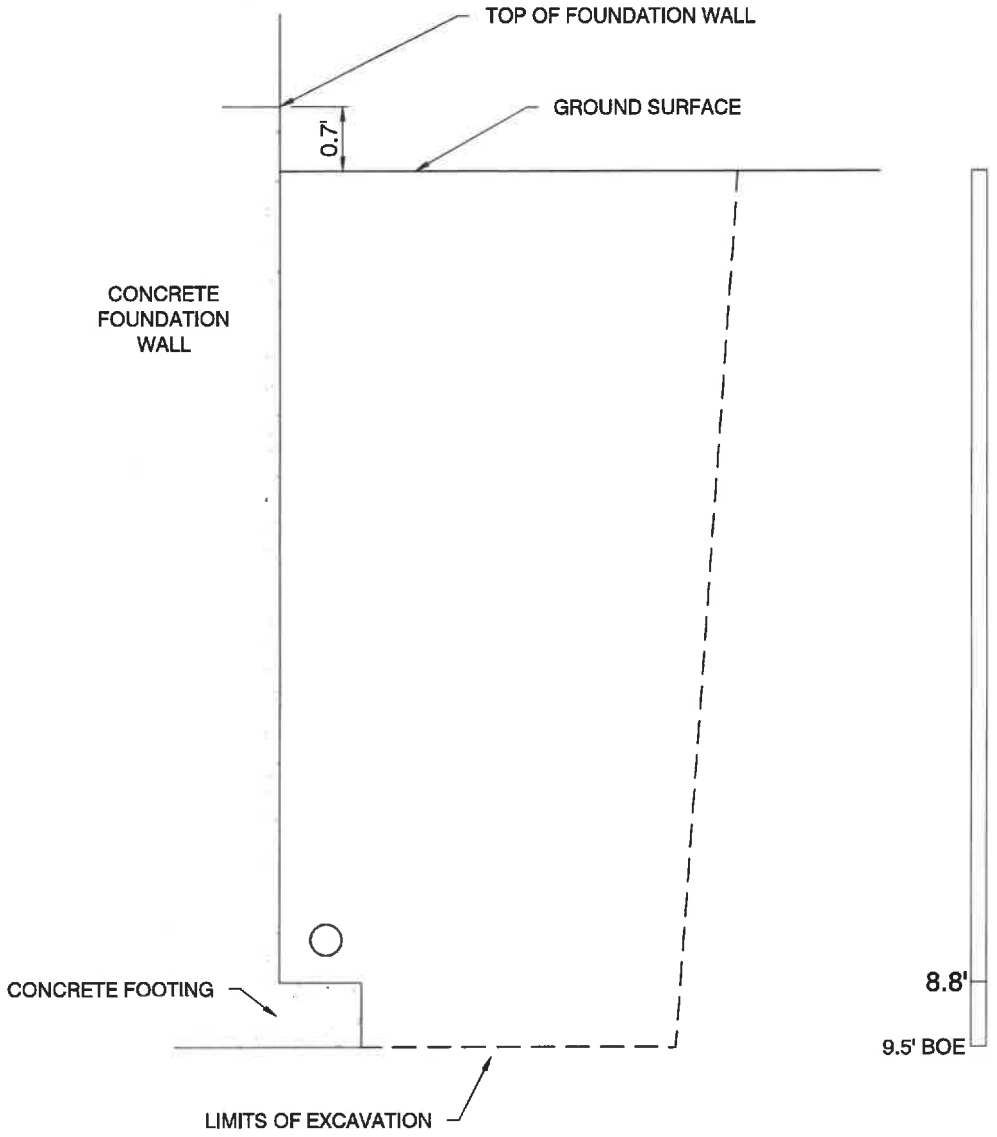

Stratification lines represent approximate boundary between soil types, transitions may be gradual. Water level readings have been made at times and under conditions stated. Fluctuations of groundwater may occur due to other factors than those present at the time measurements were made.

KEY TO NOTES AND SYMBOLS:

Water Level
- At time of Digging
- At Completion of Digging
- After Digging

qp = Pocket Penetrometer Strength, kips/sq.ft.
G.S. = G.S.
BOE = Bottom of Exploration

R:\2024\24-2450\CAD\Drawings\24-2450 TP-25-1.dwg, 1/15/2025 4:16:44 PM, CEM, S. W. Cole Engineering, Inc.

S.W.COLE ENGINEERING, INC.

KEY TO THE NOTES & SYMBOLS
Test Boring and Test Pit Explorations

All stratification lines represent the approximate boundary between soil types and the transition may be gradual.

Key to Symbols Used:

w	-	water content, percent (dry weight basis)
q_u	-	unconfined compressive strength, kips/sq. ft. - laboratory test
S_v	-	field vane shear strength, kips/sq. ft.
L_v	-	lab vane shear strength, kips/sq. ft.
q_p	-	unconfined compressive strength, kips/sq. ft. – pocket penetrometer test
O	-	organic content, percent (dry weight basis)
W_L	-	liquid limit - Atterberg test
W_P	-	plastic limit - Atterberg test
WOH	-	advance by weight of hammer
WOM	-	advance by weight of man
WOR	-	advance by weight of rods
HYD	-	advance by force of hydraulic piston on drill
RQD	-	Rock Quality Designator - an index of the quality of a rock mass.
γ_T	-	total soil weight
γ_B	-	buoyant soil weight

Description of Proportions:

Trace:	0 to 5%
Some:	5 to 12%
"Y"	12 to 35%
And	35+%
With	Undifferentiated

Description of Stratified Soils

Parting:	0 to 1/16" thickness
Seam:	1/16" to ½" thickness
Layer:	½" to 12" thickness
Varved:	Alternating seams or layers
Occasional:	one or less per foot of thickness
Frequent:	more than one per foot of thickness

REFUSAL: **Test Boring Explorations** - Refusal depth indicates that depth at which, in the drill foreman's opinion, sufficient resistance to the advance of the casing, auger, probe rod or sampler was encountered to render further advance impossible or impracticable by the procedures and equipment being used.

REFUSAL: **Test Pit Explorations** - Refusal depth indicates that depth at which sufficient resistance to the advance of the backhoe bucket was encountered to render further advance impossible or impracticable by the procedures and equipment being used.

Although refusal may indicate the encountering of the bedrock surface, it may indicate the striking of large cobbles, boulders, very dense or cemented soil, or other buried natural or man-made objects or it may indicate the encountering of a harder zone after penetrating a considerable depth through a weathered or disintegrated zone of the bedrock.

APPENDIX D

Laboratory Test Results

S.W.COLE ENGINEERING, INC.

Report of Gradation

ASTM C-117 & C-136

Project Name	ORONO ME - PROPOSED FOOD INNOVATION CENTER ADDITION - EXPLORATIONS AND GEOTECHNICAL ENGINEERING SERVICES	Project Number	24-2450
Client	UNIVERSITY OF MAINE SYSTEM	Lab ID	31063B
Exploration	**3D**	Date Received	1/6/2025
Material Source	**B-25-3, 5-7 FEET**	Date Completed	1/8/2025
		Tested By	MICHAEL WHITE

STANDARD DESIGNATION (mm/um)	SIEVE SIZE	AMOUNT PASSING (%)	
150	**6"**	**100**	
125	**5"**	**100**	
100	**4"**	**100**	
75	**3"**	**100**	
50	**2"**	**100**	
38.1	**1-1/2"**	**100**	
25.0	**1"**	**100**	
19.0	**3/4"**	**100**	
12.5	**1/2"**	**95**	
6.3	**1/4"**	**86**	
4.75	**No. 4**	**84**	15.8% Gravel
2.00	**No. 10**	**79**	
850	**No. 20**	**73**	
425	**No. 40**	**68**	35.1% Sand
250	**No. 60**	**65**	
150	**No. 100**	**58**	
75	**No. 200**	**49.1**	49.1% Fines

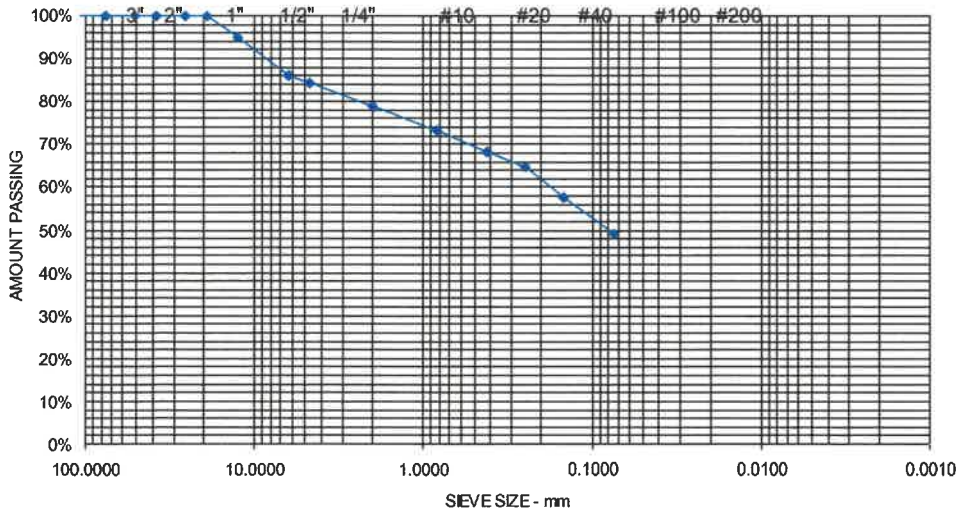

Comments:

This Page Intentionally Blank

SECTION 00 41 13
BID FORM – SHORT FORM

BIDDER: _____

Physical/Street Address _____

City, State ZIP _____

University of Maine
Office of Facilities Management
5765 Service Building
Orono ME 04469-5765

Having carefully examined the form of contract, general conditions and plans and specifications contained therein for UM Keyo Electrical Service Upgrade, as well as the premises and conditions affecting the work, we the undersigned propose to furnish all labor, equipment, and materials necessary for and reasonably incidental to the construction and completion of this contract for the Base Bid of _____

_____Dollars ($).

ALTERNATE PRICE AS FOLLOWS:

Alternate 1. Communication Cable Material and Pulling Deduct: $_____

Alternate 2. Delete the cable run from the Switchgear to Manhole EMH-3-1.
Add cable run from Switchgear through Manhole EMH-3-1 to new
Power Distribution Center (PDC) Keyo circuit breaker Add/Deduct: $_____

UNIT PRICE ITEMS: The undersigned agrees to perform additional work as directed at the following prices:

Item (quantity)	Unit Price
1.Removal of unsatisfactory soil and replacement with satisfactory soil material (15 cu yd)	$_____
2.Mass rock excavation and replacement with satisfactory soil material (10 cu yd)	$_____
3.Trench rock excavation and replacement with satisfactory soil material (5 cu yd)	$_____

This proposal includes the cost of 100% Performance Bond plus 100% Payment Bond.

The receipt of the following addenda to plans and specifications is hereby acknowledged:

ADDENDUM #_____DATED_____ADDENDUM #_____DATED_____

ADDENDUM #_____DATED_____ADDENDUM #_____DATED_____

Any material or materials not specified in the bidding document but worthy of consideration may be introduced by the bidder by a separate letter attached to this Bid. A cost comparison must be included giving the comparison with the Material specified and the reason for the suggested substitution. The basic bid shall be as specified.

The undersigned agrees, if this Bid is accepted to sign a contract and deliver it, along with the bonds and affidavits for all insurance specified within twelve (12) calendar days after the date of notification of such acceptance, except if the 12th day falls on a Saturday, Sunday or holiday, then the conditions will be fulfilled if the required documents are received before 12 o'clock noon on the day following the holiday, or the Monday following the Saturday or Sunday, and as a guarantee thereof, herewith submits a bid bond as required.

The undersigned agrees, if awarded the Contract, to substantially complete the work on or before October 1, 2026. The undersigned also agrees, if awarded the Contract, that no more than 80% of the contract

amount will be sublet to other contractors.

Signed (by individual authorized to sign contract) _____

By (printed name & title)_____Phone _____

PO Box (if applicable)_____Email_____

NOTE: If bidder is a corporation, write State of Incorporation, and if a partnership, give full names of all partners.

END OF SECTION 00 41 13

SECTION 01 23 00
ALTERNATES

PART 1 - GENERAL

1.01 RELATED DOCUMENTS

A. Drawings and general provisions of the Contract, including General and Supplementary Conditions and other Division 01 Specification Sections, apply to this Section.

1.02 SUMMARY

A. This Section includes administrative and procedural requirements for alternates.

B. Alternate~~s~~ **#1** listed below **is a** ~~are~~ "DEDUCT" alternate~~s~~. Therefore, the costs associated with this work shall be included in the proposed "Base Bid" price and identified separately as a "Deduct Alternate" price on the "Price Proposal" form.

C. Alternate #2 may be submitted as either a "DUDUCT" or an "ADD" alternate. Please note on the bid form which is selected.

1.03 DEFINITIONS

A. Alternate: An amount proposed by bidders and stated on the Bid Form (Price Proposal Form) for certain work defined in the Bidding Requirements that may be added to or deducted from the Base Bid amount if Owner decides to accept a corresponding change either in the amount of construction to be completed or in the products, materials, equipment, systems, or installation methods described in the Contract Documents.
   1. The cost or credit for each alternate is the net addition to or deduction from the Contract Sum to incorporate alternate into the Work. No other adjustments are made to the Contract Sum.
   2. Hold pricing for 60 days from date of bid to allow Owner time for project accounting. Alternates not accepted before contract signing may be added by Change Order later.

1.04 PROCEDURES

A. Coordination: Modify or adjust affected adjacent work as necessary to completely integrate work of the alternate into Project.
   1. Include as part of each alternate, miscellaneous devices, accessory objects, and similar items incidental to or required for a complete installation whether or not indicated as part of alternate.

B. Notification: Immediately following award of the Contract, notify each party involved, in writing, of the status of each alternate. Indicate if alternates have been accepted, rejected, or deferred for later consideration. Include a complete description of negotiated modifications to alternates.

C. Execute accepted alternates under the same conditions as other work of the Contract.

D. Schedule: A Schedule of Alternates is included at the end of this Section.

PART 2 - PRODUCTS (Not Used)

PART 3 - EXECUTION

3.01 SCHEDULE OF ALTERNATES

A. Alternate No. 1 – Communication Cable Material and Pulling
   1. Base Bid: Contractor to provide communication cables and all pull of cables through new underground communications conduits from manhole EHH-3 to proposed medium voltage switch location.
   2. Alternate: Contractor to remove cable and pulling for new underground communications cables from scope.

B. Alternate No. 2 – Substation Feeder Continuous Cable Run
   1. Delete the cable run from Switchgear to Manhole EMH-3-1, and delete the associated splice within Manhole EMH-3-1. The conduit between Switchgear and Manhole EMH-3-1 will remain in the base contract.
   2. Add a cable run from the Switchgear passing through Manhole EMH-3-1 to a termination point located at the Power Distribution Center KEYO Circuit Breaker, in coordination with the ongoing campus loop upgrades project.
   3. Approximately 300' of conduit pathway total will be located between the new padmount KEYO switch and the new Power Distribution Center KEYO Circuit Breaker. Contractor is responsible for installation ghe conduit pathways between KEYO Switch and Manhole EMH-3-1. The remaining conduit pathways between Manhole EMH-3-1 and the Power Distribution Breaker will be provided by others under a separate contract. Contractor is responsible for verifying the length of cable, and coordinating specific circuit breaker termination location with UMaine.
   4. When completing the bid form, indicate if this alternate is an add or a deduct by circling add or deduct on the bid form. <u>If contractor does not indicate whether the alternate is an add or deduct, then the bid will be considered invalid.</u>

END OF SECTION 012300

SECTION 26 00 10
SUPPLEMENTAL REQUIREMENTS FOR ELECTRICAL

PART 1 - GENERAL

1.01 SUMMARY

A. Section Includes:
   1. Supplemental requirements applicable to Work specified in Division 26.

1.02 REFERENCES

A. Abbreviations and Acronyms for Electrical Terms and Units of Measure:
   1. 8PSJ or 8P8C: Miniature 8-position series jack, also called an 8-position 8-contact modular jack for some applications.
   2. A: Ampere, unit of electrical current.
   3. AC or ac: Alternating current.
   4. AFCI: Arc-fault circuit interrupter.
   5. AIC: Ampere interrupting capacity.
   6. AL, Al, or ALUM: Aluminum.
   7. ASD: Adjustable-speed drive.
   8. ATS: Automatic transfer switch.
   9. AWG: American wire gauge; see ASTM B258.
   10. BAS: Building automation system.
   11. BIL: Basic impulse insulation level.
   12. BIM: Building information modeling.
   13. CAD: Computer-aided design or drafting.
   14. CATV: Community antenna television.
   15. CB: Circuit breaker.
   16. CO/ALR: Copper-aluminum, revised.
   17. COPS: Critical operations power system.
   18. CU or Cu: Copper.
   19. CU-AL or AL-CU: Copper-aluminum.
   20. dB: Decibel, a unitless logarithmic ratio of two electrical, acoustical, or optical power values.
   21. dB(A-weighted) or dB(A): Decibel acoustical sound pressure level with A-weighting applied in accordance with IEC 61672-1.
   22. dB(adjusted) or dBa: Decibel weighted absolute noise power with respect to 3.16 pW (minus 85 dBm).
   23. dBm: Decibel absolute power with respect to 1 mW.
   24. DC or dc: Direct current.
   25. DCOA: Designated critical operations area.
   26. DDC: Direct digital control (HVAC).
   27. EGC: Equipment grounding conductor.
   28. EMF: Electromotive force.
   29. EMI: Electromagnetic interference.
   30. EPM: Electrical preventive maintenance.

31. EPS: Emergency power supply.
32. EPSS: Emergency power supply system.
33. ESS: Energy storage system.
34. EV: Electric vehicle.
35. EVPE: Electric vehicle power export equipment.
36. EVSE: Electric vehicle supply equipment.
37. fc: Footcandle, a unit of illuminance equal to one lumen per square foot.
38. FLC: Full-load current.
39. ft: Foot.
40. GEC: Grounding electrode conductor.
41. GFCI: Ground-fault circuit interrupter.
42. GFPE: Ground-fault protection of equipment.
43. GND: Ground.
44. HACR: Heating, air conditioning, and refrigeration.
45. HDPE: High-density polyethylene.
46. HID: High-intensity discharge.
47. HP or hp: Horsepower.
48. HVAC: Heating, ventilating, and air conditioning.
49. Hz: Hertz.
50. IBT: Intersystem bonding termination.
51. inch: Inch. To avoid confusion, the abbreviation "in." is not used.
52. IP: Ingress protection rating (enclosures); Internet protocol (communications).
53. IR: Infrared.
54. IS: Intrinsically safe.
55. IT&R: Inspecting, testing, and repair.
56. ITE: Information technology equipment.
57. kAIC: Kiloampere interrupting capacity.
58. kcmil or MCM: One thousand circular mils.
59. kV: Kilovolt.
60. kVA: Kilovolt-ampere.
61. kVAr or kVAR: Kilovolt-ampere reactive.
62. kW: Kilowatt.
63. kWh: Kilowatt-hour.
64. LAN: Local area network.
65. lb: Pound (weight).
66. LCD: Liquid-crystal display.
67. LCDI: Leakage-current detector-interrupter.
68. LED: Light-emitting diode.
69. LNG: Liquefied natural gas.
70. LP-Gas: Liquefied petroleum gas.
71. LRC: Locked-rotor current.
72. MCC: Motor-control center.
73. MDC: Modular data center.
74. MG set: Motor-generator set.
75. MIDI: Musical instrument digital interface.
76. MLO: Main lugs only.
77. MVA: Megavolt-ampere.
78. mW: Milliwatt.
79. MW: Megawatt.
80. MWh: Megawatt-hour.
81. NC: Normally closed.

82. NiCd: Nickel cadmium.
83. NIU: Network interface unit.
84. NO: Normally open.
85. NPT: National (American) standard pipe taper.
86. OCPD: Overcurrent protective device.
87. ONT: Optical network terminal.
88. PC: Personal computer.
89. PCS: Power conversion system.
90. PCU: Power-conditioning unit.
91. PF or pf: Power factor.
92. PHEV: Plug-in hybrid electric vehicle.
93. PLC: Programmable logic controller.
94. PLFA: Power-limited fire alarm.
95. PoE: Power over Ethernet.
96. PV: Photovoltaic.
97. PVC: Polyvinyl chloride.
98. pW: Picowatt.
99. RFI: Radio-frequency interference (electrical); Request for interpretation (contract).
100. RMS or rms: Root-mean-square.
101. RPM or rpm: Revolutions per minute.
102. SCADA: Supervisory control and data acquisition.
103. SCR: Silicon-controlled rectifier.
104. SPD: Surge protective device.
105. sq.: Square.
106. SWD: Switching duty.
107. TCP/IP: Transmission control protocol/Internet protocol.
108. TEFC: Totally enclosed fan-cooled.
109. TR: Tamper resistant.
110. TVSS: Transient voltage surge suppressor.
111. UL: Underwriters Laboratories, Inc. (standards) or UL LLC (services).
112. UL CCN: UL Category Control Number.
113. UPS: Uninterruptible power supply.
114. USB: Universal serial bus.
115. UV: Ultraviolet.
116. V: Volt, unit of electromotive force.
117. V(ac): Volt, alternating current.
118. V(dc): Volt, direct current.
119. VA: Volt-ampere, unit of complex electrical power.
120. VAr: Volt-ampere reactive, unit of reactive electrical power.
121. VFC: Variable-frequency controller.
122. VOM: Volt-ohm-multimeter.
123. VPN: Virtual private network.
124. VRLA: Valve-regulated lead acid.
125. W: Watt, unit of real electrical power.
126. Wh: Watt-hour, unit of electrical energy usage.
127. WPT: Wireless power transfer.
128. WPTE: Wireless power transfer equipment.
129. WR: Weather resistant.

B. Abbreviations and Acronyms for Electrical Raceway Types:
1. EMT: Electrical metallic tubing.

2. EMT-A: Aluminum electrical metallic tubing.
3. EMT-S: Steel electrical metallic tubing.
4. EMT-SS: Stainless steel electrical metallic tubing.
5. ENT: Electrical nonmetallic tubing.
6. EPEC: Electrical HDPE underground conduit.
7. EPEC-40: Schedule 40 electrical HDPE underground conduit.
8. EPEC-80: Schedule 80 electrical HDPE underground conduit.
9. EPEC-A: Type A electrical HDPE underground conduit.
10. EPEC-B: Type B electrical HDPE underground conduit.
11. ERMC: Electrical rigid metal conduit.
12. ERMC-A: Aluminum electrical rigid metal conduit.
13. ERMC-S: Steel electrical rigid metal conduit.
14. ERMC-S-G: Galvanized-steel electrical rigid metal conduit.
15. ERMC-S-PVC: PVC-coated-steel electrical rigid metal conduit.
16. ERMC-SS: Stainless steel electrical rigid metal conduit.
17. FMC: Flexible metal conduit.
18. FMC-A: Aluminum flexible metal conduit.
19. FMC-S: Steel flexible metal conduit.
20. FMT: Steel flexible metallic tubing.
21. FNMC: Flexible nonmetallic conduit. See LFNC.
22. HDPE: See EPEC.
23. IMC: Steel electrical intermediate metal conduit.
24. LFMC: Liquidtight flexible metal conduit.
25. LFMC-A: Aluminum liquidtight flexible metal conduit.
26. LFMC-S: Steel liquidtight flexible metal conduit.
27. LFMC-SS: Stainless steel liquidtight flexible metal conduit.
28. LFNC: Liquidtight flexible nonmetallic conduit.
29. LFNC-A: Layered (Type A) liquidtight flexible nonmetallic conduit.
30. LFNC-B: Integral (Type B) liquidtight flexible nonmetallic conduit.
31. LFNC-C: Corrugated (Type C) liquidtight flexible nonmetallic conduit.
32. PVC: Rigid PVC conduit.
33. PVC-40: Schedule 40 rigid PVC conduit.
34. PVC-80: Schedule 80 rigid PVC Conduit.
35. PVC-A: Type A rigid PVC concrete-encased conduit.
36. PVC-EB: Type EB rigid PVC concrete-encased underground conduit.
37. RGS: See ERMC-S-G.
38. RMC: See ERMC.
39. RTRC: Reinforced thermosetting resin conduit.
40. RTRC-AG: Low-halogen, aboveground reinforced thermosetting resin conduit.
41. RTRC-AG-HW: Heavy wall, low-halogen, aboveground reinforced thermosetting resin conduit.
42. RTRC-AG-SW: Standard wall, low-halogen, aboveground reinforced thermosetting resin conduit.
43. RTRC-AG-XW: Extra heavy wall, low-halogen, aboveground reinforced thermosetting resin conduit.
44. RTRC-BG: Low-halogen, belowground reinforced thermosetting resin conduit.

C. Abbreviations and Acronyms for Electrical Cable Types:
1. AC: Armored cable.
2. CATV: Coaxial general-purpose cable.
3. CATVP: Coaxial plenum cable.

4. CATVR: Coaxial riser cable.
5. CI: Circuit integrity cable.
6. CL2: Class 2 cable.
7. CL2P: Class 2 plenum cable.
8. CL2R: Class 2 riser cable.
9. CL2X: Class 2 cable, limited use.
10. CL3: Class 3 cable.
11. CL3P: Class 3 plenum cable.
12. CL3R: Class 3 riser cable.
13. CL3X: Class 3 cable, limited use.
14. CM: Communications general-purpose cable.
15. CMG: Communications general-purpose cable.
16. CMP: Communications plenum cable.
17. CMR: Communications riser cable.
18. CMUC: Under-carpet communications wire and cable.
19. CMX: Communications cable, limited use.
20. DG: Distributed generation cable.
21. FC: Flat cable.
22. FCC: Flat conductor cable.
23. FPL: Power-limited fire-alarm cable.
24. FPLP: Power-limited fire-alarm plenum cable.
25. FPLR: Power-limited fire-alarm riser cable.
26. IGS: Integrated gas spacer cable.
27. ITC: Instrumentation tray cable.
28. ITC-ER: Instrumentation tray cable, exposed run.
29. MC: Metal-clad cable.
30. MC-HL: Metal-clad cable, hazardous location.
31. MI: Mineral-insulated, metal-sheathed cable.
32. MTW: Moisture-, heat-, and oil-resistant thermoplastic cable (machine tool wiring).
33. MV: Medium-voltage cable.
34. NM: Nonmetallic sheathed cable.
35. NMC: Nonmetallic sheathed cable with corrosion-resistant nonmetallic jacket.
36. NMS: Nonmetallic sheathed cable with signaling, data, and communications conductors, plus power or control conductors.
37. NPLF: Non-power-limited fire-alarm circuit cable.
38. NPLFP: Non-power-limited fire-alarm circuit cable for environmental air spaces.
39. NPLFR: Non-power-limited fire-alarm circuit riser cable.
40. NUCC: Nonmetallic underground conduit with conductors.
41. OFC: Conductive optical fiber general-purpose cable.
42. OFCG: Conductive optical fiber general-purpose cable.
43. OFCP: Conductive optical fiber plenum cable.
44. OFCR: Conductive optical fiber riser cable.
45. OFN: Nonconductive optical fiber general-purpose cable.
46. OFNG: Nonconductive optical fiber general-purpose cable.
47. OFNP: Nonconductive optical fiber plenum cable.
48. OFNR: Nonconductive optical fiber riser cable.
49. P: Marine shipboard cable.
50. PLTC: Power-limited tray cable.
51. PLTC-ER: Power-limited tray cable, exposed run.
52. PV: Photovoltaic cable.
53. RHH: Thermoset rubber, heat-resistant cable (high heat).

54. RHW: Thermoset rubber, moisture-resistant cable.
55. SA: Silicone rubber cable.
56. SE: Service-entrance cable.
57. SER: Service-entrance cable, round.
58. SEU: Service-entrance cable, flat.
59. SIS: Thermoset cable for switchboard and switchgear wiring.
60. TBS: Thermoplastic cable with outer braid.
61. TC: Tray cable.
62. TC-ER: Tray cable, exposed run.
63. TC-ER-HL: Tray cable, exposed run, hazardous location.
64. THW: Thermoplastic, heat- and moisture-resistant cable.
65. THHN: Thermoplastic, heat-resistant cable with nylon jacket outer sheath.
66. THHW: Thermoplastic, heat- and moisture-resistant cable.
67. THWN: Thermoplastic, moisture- and heat-resistant cable with nylon jacket outer sheath.
68. TW: Thermoplastic, moisture-resistant cable.
69. UF: Underground feeder and branch-circuit cable.
70. USE: Underground service-entrance cable.
71. XHH: Cross-linked polyethylene, heat-resistant cable.
72. XHHW: Cross-linked polyethylene, heat- and moisture-resistant cable.

D. Definitions:
1. Basic Impulse Insulation Level: Reference insulation level expressed in impulse crest voltage with a standard wave not longer than 1.5 times 50 microseconds and 1.5 times 40 microseconds.
2. Communications Jack: A fixed connecting device designed for insertion of a communications cable plug.
3. Communications Outlet: One or more communications jacks, or cables and plugs, mounted in a box or ring, with a suitable protective cover.
4. Designated Seismic System: A system component that requires design in accordance with ASCE/SEI 7, Ch. 13 and for which the Component Importance Factor is greater than 1.0.
5. Direct Buried: Installed underground without encasement in concrete or other protective material.
6. Enclosure: The case or housing of an apparatus, or the fence or wall(s) surrounding an installation, to prevent personnel from accidentally contacting energized parts or to protect the equipment from physical damage. Types of enclosures and enclosure covers include the following:
    a. Cabinet: An enclosure that is designed for either surface mounting or flush mounting and is provided with a frame, mat, or trim in which a swinging door or doors are or can be hung.
    b. Concrete Box: A box intended for use in poured concrete.
    c. Conduit Body: A means for providing access to the interior of a conduit or tubing system through one or more removable covers at a junction or terminal point. In the United States, conduit bodies are listed in accordance with outlet box requirements.
    d. Conduit Box: A box having threaded openings or knockouts for conduit, EMT, or fittings.
    e. Cutout Box: An enclosure designed for surface mounting that has swinging doors or covers secured directly to and telescoping with the walls of the enclosure.
    f. Device Box: A box with provisions for mounting a wiring device directly to the box.

g. Extension Ring: A ring intended to extend the sides of an outlet box or device box to increase the box depth, volume, or both.
h. Floor Box: A box mounted in the floor intended for use with a floor box cover and other components to complete the floor box enclosure.
i. Floor-Mounted Enclosure: A floor box and floor box cover assembly with means to mount in the floor that is sealed against the entrance of scrub water at the floor level.
j. Floor Nozzle: An enclosure used on a wiring system, intended primarily as a housing for a receptacle, provided with a means, such as a collar, for surface-mounting on a floor, which may or may not include a stem to support it above the floor level, and is sealed against the entrance of scrub water at the floor level.
k. Junction Box: A box with a blank cover that joins different runs of raceway or cable and provides space for connection and branching of the enclosed conductors.
l. Outlet Box: A box that provides access to a wiring system having pryout openings, knockouts, threaded entries, or hubs in either the sides or the back, or both, for the entrance of conduit, conduit or cable fittings, or cables, with provisions for mounting an outlet box cover, but without provisions for mounting a wiring device directly to the box.
m. Pedestal Floor Box Cover: A floor box cover that, when installed as intended, provides a means for typically vertical or near-vertical mounting of receptacle outlets above the floor's finished surface.
n. Pull Box: A box with a blank cover that joins different runs of raceway and provides access for pulling or replacing the enclosed cables or conductors.
o. Raised-Floor Box: A floor box intended for use in raised floors.
p. Recessed Access Floor Box: A floor box with provisions for mounting wiring devices below the floor surface.
q. Recessed Access Floor Box Cover: A floor box cover with provisions for passage of cords to recessed wiring devices mounted within a recessed floor box.
r. Raised Ring: A sleeve, which is not necessarily round, used for positioning a recessed wiring device flush with the plaster, concrete, drywall, or other wall surface.
s. Ring Cover: A box cover, with raised center portion to accommodate a specific wall or ceiling thickness, for mounting wiring devices or luminaires flush with the surface.
t. Sleeves: Mechanical protection for cable/conduits that pass through a wall or floor.
u. Termination Box: An enclosure designed for installation of termination base assemblies consisting of bus bars, terminal strips, or terminal blocks with provision for wire connectors to accommodate incoming or outgoing conductors, or both.

7. Emergency Systems: Those systems legally required and classed as emergency by municipal, state, federal, or other codes, or by any governmental agency having jurisdiction that are designed to ensure continuity of lighting, electrical power, or both, to designated areas and equipment in the event of failure of the normal supply for safety to human life.
8. Essential Electrical Systems: Those systems designed to ensure continuity of electrical power to designated areas and functions of a healthcare facility during disruption of normal power sources, and also to minimize disruption within the internal wiring system. (healthcare facilities)
9. High-Performance Building: A building that integrates and optimizes on a life-cycle basis all major high-performance attributes, including energy conservation, environment, safety, security, durability, accessibility, cost-benefit, productivity, sustainability, functionality, and operational considerations.

10. Jacket: A continuous nonmetallic outer covering for conductors or cables.
11. Luminaire: A complete lighting unit consisting of a light source such as a lamp, together with the parts designed to position the light source and connect it to the power supply. It may also include parts to protect the light source or the ballast or to distribute the light.
12. Miniature 8-Position Series Jack (8PSJ): Also called an 8-position 8-contact (8P8C) modular jack. An unkeyed jack with up to eight contacts commonly used to terminate twisted-pair and multiconductor Ethernet cable. Shape and dimensions are specified by TIA-1096.
    a. Caution: An 8PSJ is not the same thing as an FCC "registered jack" RJ45S, now called a miniature 8-position keyed jack (8PKJ). Ethernet cable plugs do not have rejection keys. Many manufacturers and suppliers incorrectly use "RJ45" as a generic term to describe any 8-position series plug or jack whether it has a rejection key or not.
13. Mode: The terms "Active Mode," "Off Mode," and "Standby Mode" are used as defined in the Energy Independence and Security Act (EISA) of 2007.
14. Multi-Outlet Assembly: A type of surface, flush, or freestanding raceway designed to hold conductors, receptacles, and switches, assembled in the field or at the factory.
15. Plenum: A compartment or chamber to which one or more air ducts are connected and that forms part of the air distribution system.
16. Provide: As used in this section, “provide” shall mean, “Furnish and install”. “Furnish” shall mean “to purchase and deliver to the project site complete with every necessary appurtenance and support”, and “install” shall mean “to unload at the delivery point at the site and perform every operation necessary to establish secure mounting and correct operation at the proper location in the project.”
17. Receptacle: A fixed connecting device arranged for insertion of a power cord plug. Also called a power jack.
18. Receptacle Outlet: One or more receptacles mounted in a box with a suitable protective cover.
19. Sheath: A continuous metallic covering for conductors or cables.
20. UL Category Control Number: An alphabetic or alphanumeric code used to identify product categories covered by UL's Listing, Classification, and Recognition Services.
21. Voltage Class: For specified circuits and equipment, voltage classes are defined as follows:
    a. Control Voltage: Having electromotive force between any two conductors, or between a single conductor and ground, that is supplied from a battery or other Class 2 or Class 3 power-limited source.
    b. Line Voltage: (1) (controls) Designed to operate using the supplied low-voltage power without transformation. (2) (transmission lines, transformers, SPDs) The line-to-line voltage of the supplying power system.
    c. Extra-Low Voltage: Not having electromotive force between any two conductors, or between a single conductor and ground, exceeding 30 V(ac rms), 42 V(ac peak), or 60 V(dc).
    d. Low Voltage: Having electromotive force between any two conductors, or between a single conductor and ground, that is rated above 30 V but not exceeding 1000 V.
    e. Medium Voltage: Having electromotive force between any two conductors, or between a single conductor and ground, that is rated about 1 kV but not exceeding 69 kV.
    f. High Voltage: (1) (circuits) Having electromotive force between any two conductors, or between a single conductor and ground, that is rated above 69 kV but not exceeding 230 kV. (2) (safety) Having sufficient electromotive force to inflict bodily harm or injury.

1.03 PROJECT/SITE CONDITIONS

A. Coordinate with all other trades to ensure proper access and space requirements.

B. Where project conditions occur necessitating departures from the drawings, submit for approval the details of and reasons for departures prior to implementing any change.

C. Alterations
   1. Visit the site and become familiar with the existing conditions, and the requirements of the Plans and Specifications. No claim will be recognized for extra compensation due to failure of becoming familiar with the conditions and extent of the proposed work.
   2. Execute all alterations, additions, removals, relocations, or new work, etc., as indicated or required to provide a complete installation in accordance with the intent of the Drawings and Specifications.

   3. Repair or replace to the Owner's satisfaction, all existing work disturbed or damaged by the alterations.
   4. Except as follows, Retain ownership and remove from site all existing materials, equipment, fixtures, wiring and devices disconnected and not reused; Pay all charges for proper disposal of materials:
      a. Materials specifically indicated to be returned to Owner.
      b. Deliver to Owner: Transformers, single phase medium voltage switches, and all other equipment specified within the project electrical specifications and drawings.
      c. Obtain receipt of delivery from Owner's Representative.
   5. Do not reuse existing wiring except as specifically indicated. Existing conduit raceways may be reused, provided that the existing wires are removed and new wires are installed.
   6. Provide finished blank plates on all existing ceiling and wall boxes which can not be removed.
   7. Ensure all circuits in existing buildings are re-energized where existing panelboards are replaced, or existing wiring is rerouted, disconnected, or disturbed. Provide and install new wiring as required to meet this condition. Verify breaker/fuse sizes on existing circuits and do not load wiring to beyond 75% of their ampacities.

1.04 COORDINATION

A. Interruption of Existing Electrical Service: Do not interrupt electrical service to facilities occupied by Owner or others unless permitted under the following conditions:
   1. Notify the University no fewer than seven days in advance of proposed interruption of electrical service.
   2. Do not proceed with interruption of electrical service without the University’s written permission.
   3. Coordinate interruption with systems impacted by outage including, but not limited to, the following:
      a. Exercising generators.
      b. Emergency lighting.
      c. Elevators.
      d. Fire-alarm systems.

~~B.~~ Temporary electrical service shall be provided by ~~under this Division 26.~~ **University Provided generator. Electrical contractor shall be responsible for providing all wiring and connections.**

1.05 PREINSTALLATION MEETINGS

A. Electrical Preconstruction Conference: Schedule conference with Architect and Owner as required in Division 01 specification, after notice to proceed. Agenda topics include, but are not limited to, the following:
   1. Electrical installation schedule.
   2. Status of power system studies.
   3. Utility work coordination and class of service requests.
   4. Commissioning activities.

1.06 SEQUENCING

A. Conduct and submit results of power system studies before submitting Product Data and Shop Drawings for electrical equipment.

1.07 SCHEDULING

A. All schedules shall be submitted to the University for approval.

1.08 INFORMATIONAL SUBMITTALS

A. Electrical Installation Schedule: At preconstruction meeting, and periodically thereafter as dates change, provide schedule for electrical installation Work to Owner and Architect including, but not limited to, milestone dates for the following activities:
   1. Submission of power system studies.
   2. Submission of specified coordination drawings.
   3. Submission of action submittals specified in Division 26.
   4. Orders placed for major electrical equipment.
   5. Arrival of major electrical equipment on-site.
   6. Preinstallation meetings specified in Division 26.
   7. Service outages.
   8. Service inspection and activation.
   9. System startup, testing, and commissioning activities for major electrical equipment.
   10. System startup, testing, and commissioning activities for emergency lighting.
   11. System startup, testing, and commissioning activities for automation systems (SCADA, BMS, lighting, HVAC, fire alarm, fire pump, etc.).
   12. Pouring of concrete housekeeping pads for electrical equipment and testing of concrete samples.
   13. Requests for special inspections.
   14. Requests for inspections by authorities having jurisdiction.

B. Certificates:
   1. Welding certificates.

1.09 CLOSEOUT SUBMITTALS

A. Updated Facility EPM Program Binders:
   1. Complete Set: On USB media that is clearly and permanently labeled with attached placard on lanyard to prevent misplacement.
   2. Volumes 2 and 8: Reproducible hardcopy on archival quality, 28 lb (105 GSM), acid-free, bond paper.

B. Operation and Maintenance Data:
   1. Provide emergency, operation, and maintenance manuals for each major system component, equipment, and device.
   2. Include the following information:
      a. Manufacturer's operating specifications.
      b. User's guides for software and hardware.
      c. Schedule of maintenance material items recommended to be stored at Project site.
      d. Detailed instructions covering operation under both normal and abnormal conditions.
      e. Time-current curves for overcurrent protective devices and manufacturer's written instructions for testing and adjusting their settings.
      f. List of load-current and overload-relay heaters with related motor nameplate data.
      g. List of lamp types and photoelectric relays used on Project, with ANSI and manufacturers' codes.
      h. Manufacturer's instructions for setting field-adjustable components.
      i. Manufacturer's instructions for testing, adjusting, and reprogramming microprocessor controls.
      j. EPSS: Manufacturer's system checklists, maintenance schedule, and maintenance log sheets in accordance with NFPA 110.
      k. Exterior pole inspection and repair procedures.

C. Software:
   1. Program Software Backup: Provide USB media that is clearly and permanently labeled with attached placard on lanyard to prevent misplacement.
   2. Provide to the university upgrades and unrestricted licenses for installed and backup software, including operating systems and programming tools required for operation and maintenance.

1.10 FIELD CONDITIONS

A. Service Conditions for Electrical Power Equipment: specified electrical power equipment must be suitable for operation under service conditions specified as usual service conditions in applicable NEMA PB series, IEEE C37 series, and IEEE C57 series standards.

PART 2 - PRODUCTS

2.01 SUBSTITUTION LIMITATIONS FOR ELECTRICAL EQUIPMENT

A. Substitution requests for electrical equipment will be entertained under the following conditions:

1. Substitution requests may be submitted for consideration prior to the Electrical Preconstruction Conference if accompanied by value analysis data indicating that substitution will comply with Project performance requirements while significantly increasing value for Owner throughout life of facility.
2. Substitution requests may be submitted for consideration concurrently with submission of power system study reports when those reports indicate that substitution is necessary for safety of maintenance personnel and facility occupants.
3. Contractor is responsible for sequencing and scheduling power system studies and electrical equipment procurement. After the Electrical Preconstruction Conference, insufficient lead time for electrical equipment delivery will not be considered a valid reason for substitution.

PART 3 - EXECUTION

3.01 WORKMANSHIP AND INSTALLATION

A. Execute all work in a neat manner acceptable to the Local and State Electrical Inspector and Engineer. Follow manufacturer's installation recommendations.

B. All electrical components and their attachments shall be properly supported and where required shall be designed for seismic forces.

C. Perform all electrical work by licensed electricians well skilled in the trade and supervised by a Master Electrician.

D. Replace or repair to new condition, defective equipment and equipment damaged during installation or testing.

E. Transformers: Transformers within the building construction shall be mounted on Type DNP isolators.

F. Isolation Mounts: All mounts shall be aligned squarely above or below mounting points for the supported equipment.

G. Position isolated electrical equipment so that it is free standing and does not come in rigid contact with the building structure or other systems.

3.02 TESTING AND ADJUSTING

A. The entire installation shall be free from short circuits and improper grounds. Test in the presence of the Architects or their representatives.

B. Test feeders with the feeders disconnected from the branch circuit panels.

C. Test each individual branch circuit at the panel. In testing for insulation resistance to ground, the power equipment shall be connected for proper operation. In no case shall the insulation resistance be less than that required by the National Electrical Code and the manufacturer's recommendations. Correct failure in a manner satisfactory to the Architect and Engineers.

D. Completely test and adjust each system specified under Division 26 for proper operation.

3.03 SLEEVES, INSERTS AND OPENINGS

A. Sleeves:
1. Furnish and install all sleeves required for the work.
2. Sleeves through exterior building walls or through concrete construction shall be rigid galvanized steel.
3. Sleeves shall be sized to provide a total of not less than 1/2-inch clearance around conduit.
4. Sleeves for setting into walls shall be flush with finished construction. Sleeves for setting into floor shall be embedded in concrete slab and extend approximately 2 inches above finished floors.
5. All sleeved openings within building shall be sealed airtight using fire barrier caulking with a UL classification for use as a fire penetration seal for walls and floors with up to a 3-hour fire rating expanded.
6. Sleeves shall be provided in all locations where cables and conduits penetrate walls and floors.
7. Selection of firestopping materials and installation shall be in accordance with specifications Division 07 Section “Through Penetration Firestop Systems” for Firestopping”.

3.04 DEVELOPMENT OF FACILITY EPM PROGRAM

A. Facility EPM Program must be developed by qualified EPM specialist.

B. Conduct Facility EPM Program analysis in accordance with NFPA 70B recommendations.
1. Renovation Projects:
   a. Facility diagrams must include connected existing equipment for entire facility where known. Areas of uncertainty should be clearly indicated.
   b. Obtain copies of existing operation and maintenance data and existing Facility EPM Program information from Owner.
   c. Facility EPM Program analysis should identify existing equipment that does not have available operation and maintenance data, and should explain the Owner's risks because this equipment is not included in Facility EPM Program.
   d. Data for existing equipment outside scope of Project may be inserted in Facility EPM Program Binders without analysis.
   e. Data for existing equipment impacted by scope of Project should be analyzed and documented similar to Project's new equipment data as much as possible.

C. Compile operation and maintenance data from Facility EPM Program analysis and submit updated Facility EPM Program Binders.

3.05 INSTALLATION OF ELECTRICAL WORK

A. Unless more stringent requirements are specified in the Contract Documents or manufacturers' written instructions, comply with NFPA 70 and NECA NEIS 1 for installation of Work specified in Division 26. Consult Architect for resolution of conflicting requirements.

3.06 FIELD QUALITY CONTROL

A. Administrant for Medium-Voltage and Low-Voltage Electrical Tests and Inspections:
   1. Engage qualified medium-voltage and low-voltage electrical testing and inspecting agency to administer and perform tests and inspections.

3.07 CLOSEOUT ACTIVITIES

A. Demonstration:
   1. With assistance from factory-authorized service representatives, demonstrate to Owner's maintenance personnel how to operate the following systems and equipment:
      a. Electronic metering specified in Section 260913 "Electrical Power Monitoring."
   2. Allow Owner to record demonstrations.

B. Training:
   1. With assistance from factory-authorized service representatives as appropriate, train Owner's maintenance personnel on all applicable topics addressed within Electrical specifications.
   2. Allow Owner to record training sessions.

3.08 RECORD DRAWINGS

A. Submit under provisions of Division 01 Sections “Operation and Maintenance Data” and “Project Record Documents”.

B. Keep a marked set of Drawings at the site as a record set indicating all revisions in the work as the work progresses. At the completion of the work, mark the Drawings "As-Built Drawings" with the Contractor's name and date, and deliver to the Architect.

3.09 PERFORMANCE REQUIREMENTS

A. Conform to requirements of the latest edition of ANSI/NFPA 70 National Electrical Code (N.E.C.).

B. Conform to requirements of all local, State and Federal laws and regulations, plus local electric utility company's rules, and the Fire Underwriters' requirements.

C. Furnish products listed and classified by Underwriters' Laboratories, Inc. (U.L.) as suitable for purpose specified and shown.

D. Secure and pay for all permits and certificates as required by local, State and Federal laws.

E. Request inspections from authority having jurisdiction.

F. Run separate circuits for lighting and receptacle outlets as indicated.
   1. Circuits shall be balanced and loads and capacities shall be in accordance with requirements of local electric light company and National Board of Fire Underwriters.
   2. Do not share neutral on branch circuits.

G. The entire electrical system shall be permanently and effectively grounded in accordance with Code requirements.

H. The Drawings indicate only diagrammatically the extent, layout and the general location and arrangement of equipment, conduit and wiring. Become familiar with all details of the work and verify all dimensions in the field so that the outlets and equipment will be properly located and readily accessible.

END OF SECTION 26 00 10

This Page Left Intentionally Blank

SECTION 26 24 13
SWITCHBOARDS

PART 1 - GENERAL

1.01 SUMMARY

A. Section Includes:
1. Switchboards.
2. Surge protection devices.
3. Disconnecting and overcurrent protective devices.
4. Instrumentation.
5. Control power.
6. Accessory components and features.

B. Related Requirements
1. Section 260010 "Supplemental Requirements for Electrical" for additional abbreviations, definitions, submittals, qualifications, testing agencies, and other Project requirements applicable to Work specified in this Section.
2. Section 260573.19 "Arc-Flash Hazard Analysis" for arc-flash analysis and arc-flash label requirements.

1.02 COORDINATION

A. Coordinate layout and installation of switchboards and components with other construction that penetrates walls or is supported by them, including electrical and other types of equipment, raceways, piping, encumbrances to workspace clearance requirements, and adjacent surfaces. Maintain required workspace clearances and required clearances for equipment access doors and panels.

B. Coordinate sizes and locations of concrete bases with actual equipment provided.

1.03 ACTION SUBMITTALS

A. Product Data:
1. Switchboards.
2. Overcurrent protective devices.
3. Surge protection devices.
4. Ground-fault protection devices.
5. Accessories.
6. Other components.
7. Include dimensions and manufacturers' technical data on features, performance, electrical characteristics, ratings, accessories, and finishes.

B. Shop Drawings: For each switchboard and related equipment.

1. Include dimensioned plans, elevations, sections, and details, including required clearances and service space around equipment. Show tabulations of installed devices, equipment features, and ratings.
2. Detail enclosure types for types other than UL 50E, Type 1.
3. Detail bus configuration, current, and voltage ratings.
4. Detail short-circuit current rating of switchboards and overcurrent protective devices.
5. Detail utility company's metering provisions with indication of approval by utility company.
6. Detail features, characteristics, ratings, and factory settings of individual overcurrent protective devices and auxiliary components.
7. Include time-current coordination curves for each type and rating of overcurrent protective device included in switchboards. Submit on translucent log-log graft paper; include selectable ranges for each type of overcurrent protective device.
8. Include schematic and wiring diagrams for power, signal, and control wiring.

C. Field Quality-Control Submittals:
1. Field Quality-Control Reports:
a. Test procedures used.
b. Test results that comply with requirements.
c. Results of failed tests and corrective action taken to achieve test results that comply with requirements.

1.04 INFORMATIONAL SUBMITTALS

A. Manufacturers' Published Instructions: Record copy of official installation and testing instructions issued to Installer by manufacturer for the following:
1. Handling, storing, and providing temporary heat.
2. Mounting accessories and anchoring devices.
3. Testing and adjusting overcurrent protective devices.

B. Sample warranties.

1.05 CLOSEOUT SUBMITTALS

A. Warranty documentation.

1.06 MAINTENANCE MATERIAL SUBMITTALS

A. Spare Parts: Furnish to Owner spare parts, for repairing switchboards, that are packaged with protective covering for storage on-site and identified with labels describing contents. Include the following:
1. Potential Transformer Fuses: Equal to 10 percent of quantity installed for each size and type but no fewer than two of each size and type.
2. Control-Power Fuses: Equal to 10 percent of quantity installed for each size and type, but no fewer than two of each size and type.
3. Fuses for Fused Power-Circuit Devices: Equal to 10 percent of quantity installed for each size and type but no fewer than three of each size and type.

4. Indicating Lights: Equal to 10 percent of quantity installed for each size and type but no less than one of each size and type.

~~**B.**~~ Special Tools: Furnish to Owner proprietary equipment, keys, and software required to operate, maintain, repair, adjust, or implement future changes to switchboards, that are packaged with protective covering for storage on-site and identified with labels describing contents. ~~**Include the following:**~~

1. ~~**Portable Test Set: For testing functions of solid-state trip devices without removing from switchboard. Include relay and meter test plugs suitable for testing switchboard meters and switchboard class relays.**~~
2. ~~**Spare Fuse Cabinet: Suitably identified, wall-mounted, lockable, compartmented steel box or cabinet. Arrange for wall mounting.**~~

1.07 DELIVERY, STORAGE, AND HANDLING

A. Deliver switchboards in sections or lengths that can be moved past obstructions in delivery path.

B. Handle and prepare switchboards for installation in accordance with NEMA PB 2.1.

1.08 WARRANTY

A. Installer warrants that fabricated and installed switchboard perform in accordance with specified requirements and agrees to repair or replace components that fail to perform as specified within warranty period.

PART 2 - PRODUCTS

2.01 SWITCHBOARDS

A. Square D. (I-Line), or approved equal

B. Source Limitations: Obtain switchboards, overcurrent protective devices, components, and accessories from single source from single manufacturer.

C. Product Selection for Restricted Space: Drawings indicate maximum dimensions for switchboards including clearances between switchboards and adjacent surfaces and other items. Comply with indicated maximum dimensions.

D. Electrical Components, Devices, and Accessories: Listed and labeled in accordance with NFPA 70, by qualified electrical testing laboratory recognized by authorities having jurisdiction, and marked for intended location and application.

E. Comply with NEMA PB 2.

F. Comply with NFPA 70.

G. Comply with UL 891.

H. Front-Connected, Front-Accessible Switchboards:
   1. Main Devices: Panel mounted.
   2. Branch Devices: Panel mounted.
   3. Sections front and rear aligned.

I. Nominal System Voltage: 480Y/277 V

J. Main-Bus Continuous: 1200 A.

K. Indoor Enclosures: Steel, UL 50E, Type 1.

L. Enclosure Finish for Indoor Units: Factory-applied finish in manufacturer's standard gray finish over rust-inhibiting primer on treated metal surface.

M. Service Entrance Rating: Switchboards intended for use as service entrance equipment may contain one service disconnecting means with overcurrent protection, neutral bus with disconnecting link, grounding electrode conductor terminal, and main bonding jumper.

N. Hinged Front Panels: Allow access to circuit breaker, metering, accessory, and blank compartments.

O. Buses and Connections: Three phase, four wire unless otherwise indicated.
   1. Provide phase bus arrangement A, B, C from front to back, top to bottom, and left to right when viewed from front of switchboard.
   2. Phase- and Neutral-Bus Material:
      a. Hard-drawn copper of 98 percent conductivity**,** silver-plated or Tin-plated, high-strength, electrical-grade aluminum alloy with tin-plated aluminum circuit-breaker line connections.
   3. Copper feeder circuit-breaker line connections or Tin-plated aluminum feeder circuit-breaker line connections.
   4. Ground Bus: 1/4 by 2 inch (6 by 50 mm-) OR Minimum-size required by UL 891, hard-drawn copper of 98 percent conductivity, equipped with mechanical connectors for feeder and branch-circuit ground conductors.
   5. Main-Phase Buses and Equipment-Ground Buses: Uniform capacity for entire length of switchboard's main and distribution sections. Provide for future extensions from both ends.
   6. Disconnect Links:
      a. Isolate neutral bus from incoming neutral conductors.
      b. Bond neutral bus to equipment-ground bus for switchboards utilized as service equipment or separately derived systems.
   7. Neutral Buses: 100 percent of ampacity of phase buses unless otherwise indicated, equipped with mechanical connectors for outgoing circuit neutral cables. Brace bus extensions for busway feeder neutral bus.

P. Future Devices: Equip compartments with mounting brackets, supports, bus connections, and appurtenances at full rating of circuit-breaker compartment.

Q. Bus-Bar Insulation: Factory-applied, flame-retardant, tap

R. e wrapping of individual bus bars or flame-retardant, spray-applied insulation. Minimum insulation temperature rating of 105 deg C.

2.02 SURGE PROTECTION DEVICES

A. Schneider Electric, or approved equal.

B. SPDs: Listed and labeled in accordance with UL 1449, Type 2.

C. Features and Accessories:
   1. Indicator light display for protection status.
   2. Form-C contacts rated at 5 A and 250 V(ac), one normally open and one normally closed, for remote monitoring of protection status. Contacts must reverse on failure of surge diversion module or on opening of current-limiting device. Coordinate with building power monitoring and control system.
   3. Surge counter.

D. Peak Surge Current Rating: Minimum single-pulse surge current withstand rating per phase may not be less than 200 kA. Peak surge current rating must be arithmetic sum of ratings of individual MOVs in each mode.

E. Protection modes and UL 1449 VPR for grounded wye circuits with 480Y/277 V, three-phase, four-wire circuits may not exceed the following:
   1. Line to Neutral: 1200 V for 480Y/277 V.
   2. Line to Ground: 1200 V for 480Y/277 V.
   3. Line to Line: 2000 V for 480Y/277 V.

F. SCCR: Equal or exceed 100 kA.

G. Nominal Rating: 20 kA.

2.03 DISCONNECTING AND OVERCURRENT PROTECTIVE DEVICES

A. Molded-Case Circuit Breaker (MCCB): Comply with UL 489, with interrupting capacity to meet available fault currents.
   1. Main circuit breaker (branch mounted) Electronic trip circuit breaker with RMS sensing; field-replaceable rating plug or field-replicable electronic trip; and the following field-adjustable settings:
      a. Instantaneous trip.
      b. Long- and short-time pickup levels.
      c. Long and short time adjustments.
      d. Ground-fault pickup level, time delay, and I squared t response.
      e. Anti-single phase protection

B. Molded-Case Circuit Breaker (MCCB): Comply with UL 489, with interrupting capacity to meet available fault currents.
   1. Branch Circuit breaker Electronic trip circuit breaker with RMS sensing; field-replaceable rating plug or field-replicable electronic trip; and the following field-adjustable settings:
      a. Instantaneous trip.
      b. Long- and short-time pickup levels.
      c. Long and short time adjustments.

2.04 INSTRUMENTATION

A. Instrument Transformers: NEMA EI 21.1, and the following:
   1. Potential Transformers: NEMA EI 21.1; 120 V, 60 Hz, tapped secondary; disconnecting type with integral fuse mountings. Burden and accuracy must be consistent with connected metering and relay devices.
   2. Current Transformers: NEMA EI 21.1; 5 A, 60 Hz, secondary; wound bar type; double secondary winding and secondary shorting device. Burden and accuracy must be consistent with connected metering and relay devices.
   3. Control-Power Transformers: Dry type, mounted in separate compartments for units larger than 3 kVA.
   4. Current Transformers for Neutral and Ground-Fault Current Sensing: Connect secondary wiring to ground overcurrent relays, via shorting terminals, to provide selective tripping of main and tie circuit breaker. Coordinate with feeder circuit-breaker, ground-fault protection.

B. Multifunction Digital-Metering Monitor: Microprocessor-based unit suitable for three- or four-wire systems and with the following features:
   1. Switch-selectable digital display of the following values with maximum accuracy tolerances as indicated:
      a. Phase Currents, Each Phase: Plus or minus 0.5 percent.
      b. Phase-to-Phase Voltages, Three Phase: Plus or minus 0.5 percent.
      c. Phase-to-Neutral Voltages, Three Phase: Plus or minus 0.5 percent.
      d. Megawatts: Plus or minus 1 percent.
      e. Megavars: Plus or minus 1 percent.
      f. Power Factor: Plus or minus 1 percent.
      g. Frequency: Plus or minus 0.1 percent.
      h. Accumulated Energy, Megawatt Hours: Plus or minus 1 percent; accumulated values unaffected by power outages up to 72 hours.
      i. Megawatt Demand: Plus or minus 1 percent; demand interval programmable from five to 60 minutes.
      j. Contact devices to operate remote impulse-totalizing demand meter.
   2. Mounting: Display and control unit flush or semiflush mounted in instrument compartment door.
   3. Ratchets to prevent reverse rotation.
   4. Removable meter with drawout test plug.
   5. Semiflush mounted case with matching cover.
   6. Appropriate multiplier tag.

C. Manufacturer: Electro Industries Gauge Tech, Nexus or equal

2.05 CONTROL POWER

A. Control Circuits:
   1. 120 V(ac), supplied from remote branch circuit.

2.06 ACCESSORY COMPONENTS AND FEATURES

A. Mounting Accessories: For anchors, mounting channels, bolts, washers, and other mounting accessories, comply with requirements in manufacturer's instructions.

PART 3 - EXECUTION

3.01 EXAMINATION

A. Receive, inspect, handle, and store switchboards in accordance with NEMA PB 2.1.
   1. Lift or move panelboards with spreader bars and manufacturer-supplied lifting straps following manufacturer's published instructions.
   2. Use rollers, slings, or other manufacturer-approved methods if lifting straps are not furnished.
   3. Protect from moisture, dust, dirt, and debris during storage and installation.
   4. Install temporary heating during storage in accordance with manufacturer's published instructions.

B. Examine switchboards before installation. Reject switchboards that are moisture damaged or physically damaged.

C. Examine elements and surfaces to receive switchboards for compliance with installation tolerances and other conditions affecting performance of the Work or that affect performance of equipment.

D. Proceed with installation only after unsatisfactory conditions have been corrected.

3.02 INSTALLATION

A. Comply with manufacturer's published instructions.

B. Reference Standards:
   1. Switchboards and Accessories: Unless more stringent requirements are specified in Contract Documents or manufacturers' published instructions, comply with NEMA PB 2.1.
   2. Consult Architect for resolution of conflicting requirements.
   3. Temporary Lifting Provisions: Remove temporary lifting eyes, channels, straps and brackets, and temporary blocking of moving parts from switchboard units and components.
   4. Operating Instructions: Frame and mount printed basic operating instructions for switchboards, including control and key interlocking sequences and emergency procedures. Fabricate frame of finished wood or metal and cover instructions with clear acrylic plastic. Mount on front of switchboards.
   5. Install filler plates in unused spaces of panel-mounted sections.
   6. Install overcurrent protective devices, surge protection devices, and instrumentation.
      a. Set field-adjustable switches and circuit-breaker trip ranges.
   7. Install spare-fuse cabinet.

3.03 CONNECTIONS

A. Bond conduits entering underneath switchboard to equipment ground bus with bonding conductor sized in accordance with NFPA 70.

B. Support and secure conductors within switchboard in accordance with NFPA 70.

C. Extend insulated equipment grounding cable to busway ground connection and support cable at intervals in vertical run.

3.04 IDENTIFICATION

A. Identify field-installed conductors, interconnecting wiring, and components; provide warning signs complying with requirements for identification specified in Section 260553 "Identification for Electrical Systems."

B. Switchboard Nameplates: Label each switchboard compartment with nameplate complying with requirements for identification specified in Section 260553 "Identification for Electrical Systems."

C. Device Nameplates: Label each disconnecting and overcurrent protective device and each meter and control device mounted in compartment doors with nameplate complying with requirements for identification specified in Section 260553 "Identification for Electrical Systems."

D. Service Equipment Label: Labeled, by qualified electrical testing laboratory recognized by authorities having jurisdiction, for use as service equipment for switchboards with one or more service disconnecting and overcurrent protective devices.

3.05 FIELD QUALITY CONTROL

A. Field tests and inspections shall be witnessed by Architect and /or University.

B. Tests and Inspections:
   1. Acceptance Testing:
      a. Test insulation resistance for each switchboard bus, component, connecting supply, feeder, and control circuit. Open control and metering circuits within switchboard, and remove neutral connection to surge protection and other electronic devices prior to insulation test. Reconnect after test.
      b. Test continuity of each circuit.
   2. Test ground-fault protection of equipment for service equipment in accordance with NFPA 70.
      a. Overcurrent devices installed in a circuit breaker rated or adjustable to 1200A or higher must meet the additional requirements for RELT (Reduced Energy Let Through) testing and documentation noted in NEC Section 240.87.
      b. GFCI circuit breakers rated 1000A or more shall be tested in accordance with NEC 230.95 (C).
   3. Perform each visual and mechanical inspection and electrical test stated in NETA Acceptance Testing Specification. Certify compliance with test parameters.

4. Correct malfunctioning units on-site where possible, and retest to demonstrate compliance; otherwise, replace with new units and retest.
5. Inspect completed installation for physical damage, proper alignment, anchorage, and grounding.
6. Measure insulation resistance of each bus section phase to phase and phase to ground for one minute each. Test voltage shall be 1000 volts, and minimum acceptable value for insulation resistance ins 2 megohms.
7. Perform the following infrared scan tests and inspections, and prepare reports:
   a. Initial Infrared Scanning: After Substantial Completion, but not more than 60 days after Final Acceptance, perform infrared scan of each switchboard. Remove front panels so joints and connections are accessible to portable scanner.
   b. Follow-up Infrared Scanning: Perform additional follow-up infrared scan of each switchboard 11 months after date of Substantial Completion.
   c. Instruments and Equipment:

      1) Use infrared scanning device designed to measure temperature or to detect significant deviations from normal values. Provide calibration record for device.
8. Test and adjust controls, remote monitoring, and safeties. Replace damaged and malfunctioning controls and equipment.

C. Nonconforming Work:
   1. Switchboard will be considered defective if it does not pass tests and inspections.
   2. Remove and replace defective units and retest.

D. Collect, assemble, and submit test and inspection reports, including certified report that identifies switchboards included and that describes scanning results. Include notation of deficiencies detected, remedial action taken, and observations after remedial action.

3.06 ADJUSTING

A. Adjust moving parts and operable components to function smoothly, and lubricate as recommended by manufacturer.

B. Touch-up scratched or marred surfaces to match original finish.

C. Set field-adjustable circuit-breaker trip ranges as specified in Section 260573.16 "Coordination Studies."

3.07 PROTECTION

A. Temporary Heating: Apply temporary heat, to maintain temperature in accordance with manufacturer's published instructions, until switchboard is ready to be energized and placed into service.

END OF SECTION 26 24 13

This Page Left Intentionally Blank

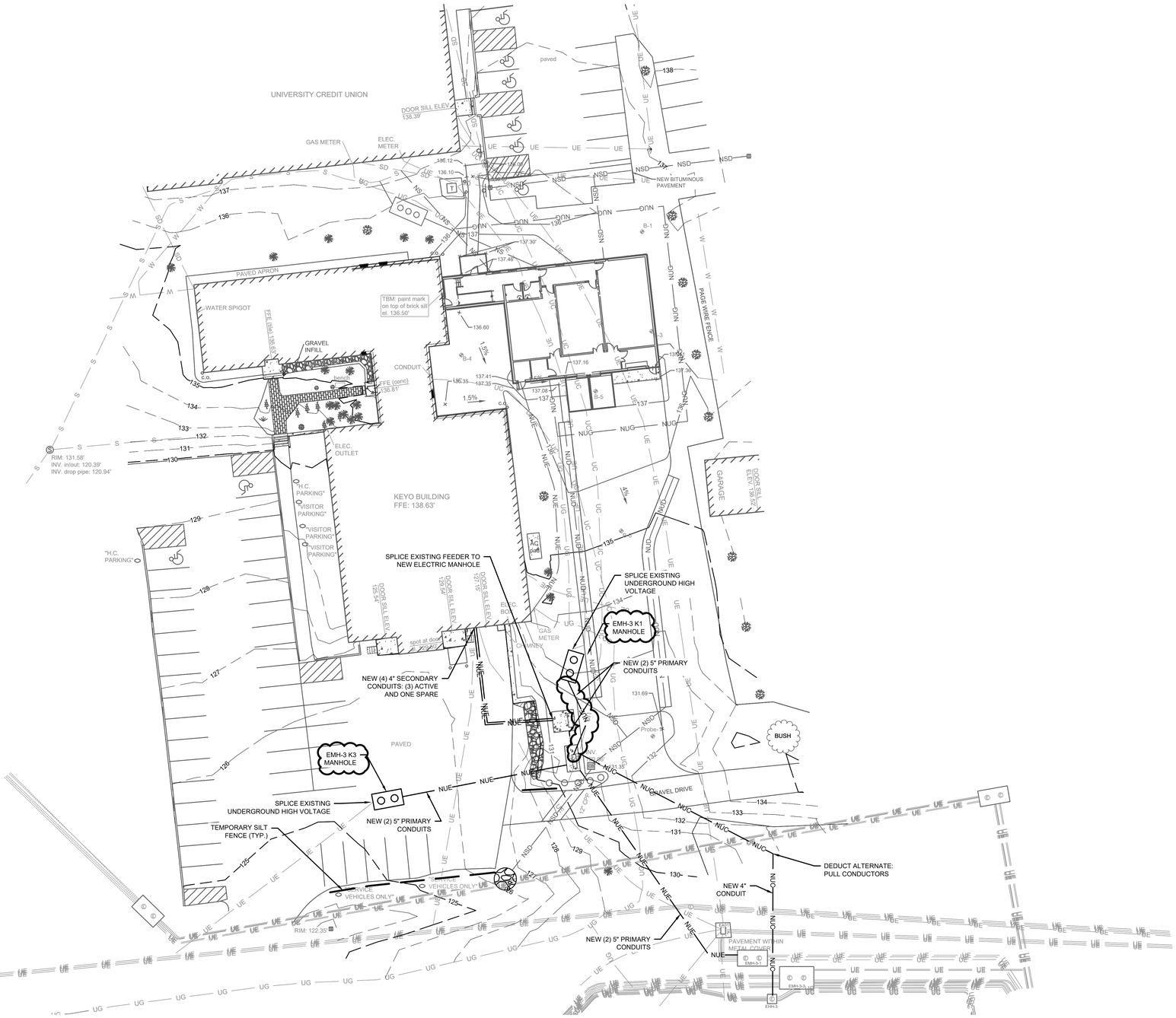

Harriman

UNIVERSITY OF MAINE
KEYO BUILDING
ELECTRICAL SERVICE
UPGRADE

ORONO, MAINE

Harriman Project No.	24265

Graphic Scale 0' 20' (line measures 1" when plotted at full size)

Plan North

True North

STATE OF MAINE
DAVID P. LATHAM
No. 17064
LICENSED
PROFESSIONAL ENGINEER

CONSTRUCTION DOCUMENTS

JANUARY 5, 2026

Revision Date	Revision Description
02-03-2026	ADDENDUM 1

Drawn by: DPL

SITE UTILITY PLAN

C40-1

KEY NOTES

P01 COORDINATE ROUTING OF TWO 4" CONDUITS THROUGH BOILER (FURNACE) ROOM. EXTEND FIVE FEET BEYOND FOUNDATION WALL FOR FOOD INOVATION BUILDING ADDITION PROJECT TO TIE INTO.

P02 PROVIDE 120VOLT CIRCUIT FOR EXHAUST FAN. TIE TO NEAREST PANEL WITH AVAILABLE 20AMP SINGLE POLE 120VOLT CIRCUIT BREAKER.

GENERAL NOTES

1. PROVIDE HOUSEKEEPING PADS FOR ALL FLOOR MOUNTED AND GRADE MOUNTED ELECTRICAL EQUIPMENT. MINIMUM REQUIREMENTS: 4" HIGH, 4% AIR ENTRAINED, POLYFIBER REINFORCED CONCRETE. 4" WIDER AND 4" LONGER THAN EQUIPMENT TO BE PLACED ON IT. REFER TO ELECTRICAL DETAIL DRAWINGS FOR TRANSFORMER, OR SWITCHBOARD PADS THAT MAY EXCEED THESE REQUIREMENTS.

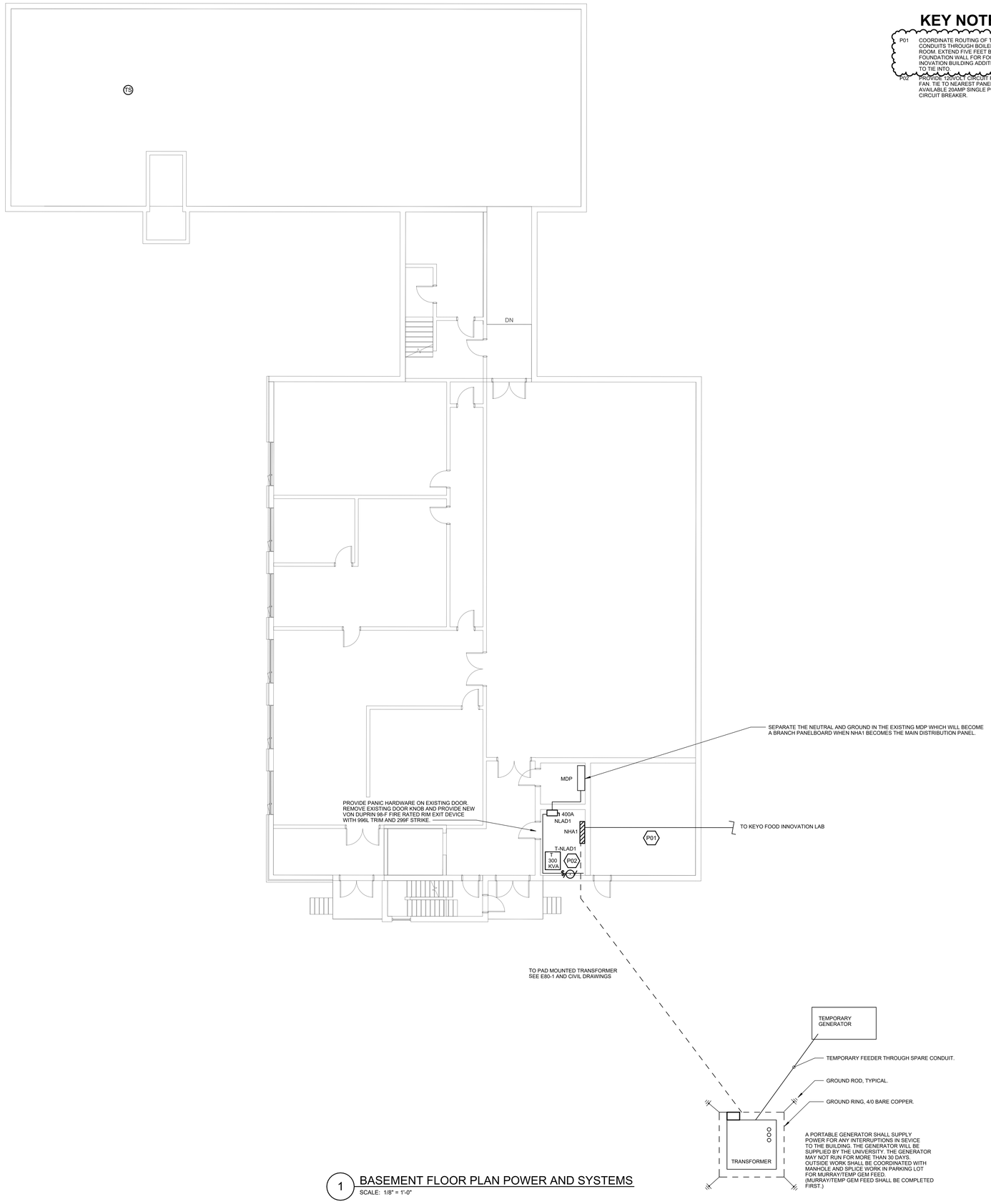

1 BASEMENT FLOOR PLAN POWER AND SYSTEMS
SCALE: 1/8" = 1'-0"

Harriman

UNIVERSITY OF MAINE
KEYO BUILDING
ELECTRICAL SERVICE
UPGRADE

ORONO, MAINE

Harriman Project No.	24265

Graphic Scale
0" 1"
(scale measures 1" when plotted at full size)

STATE OF MAINE
CHELSEA L. HADSEL
No. 17097
LICENSED PROFESSIONAL ENGINEER

CONSTRUCTION DOCUMENTS

JANUARY 5, 2026

Revision Date	Revision Description
02-03-2026	ADDENDUM 1

Drawn by: PRA

BASEMENT FLOOR PLAN POWER AND SYSTEMS

E20-0

Panel: NHA1

Location:
Supply From:
Mounting: SURFACE
Enclosure: Type 1

Volts: 480Y/277
Phases: 3
Wires: 4

A.I.C. Rating: 65,000
Mains Type: BRANCH MOUNTED
Mains Rating: 1200 A

Notes:

CKT	Circuit Description	Trip	Poles	A		B		C		Poles	Trip	Circuit Description	CKT
1				0 VA									2
3	SPARE	200 A	3			0 VA							4
5								0 VA					6
7				2700...									8
9	EXISTING MDP VIA TRANSFORMER T-NLAD1	400 A	3			2700...							10
11								2700...					12
13				0 VA									14
15	FOOD INNOVATION LAB	800 A	3			0 VA							16
17								0 VA					18
19				0 VA									20
21	BRANCH MOUNTED MAIN	1200 A	3			0 VA							22
23								0 VA					24
			Total Load:	27000 VA		27000 VA		27000 VA					
			Total Amps:	97 A		97 A		97 A					

Legend:

Panel Totals

Total Conn. Load:	81000 VA
Total Est. Demand:	81000 VA
Total Conn.:	97 A
Total Est. Demand:	97 A

Notes:

FEEDER SCHEDULE: 3 WIRE			
SYMBOL	PHASE CONDUCTOR	EGC	CONDUIT
20Δ	(3) #12	(1) #12	3/4"
30Δ	(3) #10	(1) #10	3/4"
40Δ	(3) #8	(1) #10	1"
50Δ	(3) #6	(1) #10	1"
60Δ	(3) #4	(1) #10	1"
70Δ	(3) #4	(1) #8	1"
80Δ	(3) #3	(1) #8	1"
90Δ	(3) #2	(1) #8	1-1/2"
100Δ	(3) #2	(1) #8	1-1/2"
125Δ	(3) #1	(1) #6	2"
150Δ	(3) #1/0	(1) #6	2"
175Δ	(3) #2/0	(1) #6	2"
200Δ	(3) #3/0	(1) #6	2"
225Δ	(3) #4/0	(1) #4	2-1/2"
250Δ	(3) #250 KCMIL	(1) #4	2-1/2"
300Δ	(3) #350 KCMIL	(1) #4	3"
350Δ	(3) #500 KCMIL	(1) #3	3"
400Δ	(3) #600 KCMIL	(1) #3	3-1/2"
500Δ	(2) SETS OF (3) #250 KCMIL	(1) #2	(2) 2-1/2"
600Δ	(2) SETS OF (3) #350 KCMIL	(1) #1	(2) 3"
800Δ	(3) SETS OF (3) #300 KCMIL	(1) #1/0	(3) 3"
1000Δ	(3) SETS OF (3) #400 KCMIL	(1) #2/0	(3) 3"
1200Δ	(4) SETS OF (3) #350 KCMIL	(1) #3/0	(4) 3"
1600Δ	(5) SETS OF (3) #400 KCMIL	(1) #4/0	(5) 3"
2000Δ	(6) SETS OF (3) #500 KCMIL	(1) #250 KCMIL	(6) 3"
2500Δ	(7) SETS OF (3) #500 KCMIL	(1) #350 KCMIL	(7) 3"
3000Δ	(8) SETS OF (3) #500 KCMIL	(1) #400 KCMIL	(8) 3"
4000Δ	(10) SETS OF (3) #600 KCMIL	(1) #500 KCMIL	(10) 4"
5000Δ	(12) SETS OF (3) #600 KCMIL	(1) #700 KCMIL	(12) 4"

FEEDER SCHEDULE: 4 WIRE			
SYMBOL	PHASE CONDUCTOR	EGC	CONDUIT
20Y	(4) #12	(1) #12	3/4"
30Y	(4) #10	(1) #10	3/4"
40Y	(4) #8	(1) #10	1"
50Y	(4) #6	(1) #10	1"
60Y	(4) #4	(1) #10	1-1/4"
70Y	(4) #4	(1) #8	1-1/4"
80Y	(4) #3	(1) #8	1-1/4"
90Y	(4) #2	(1) #8	1-1/2"
100Y	(4) #2	(1) #8	1-1/2"
125Y	(4) #1	(1) #6	2"
150Y	(4) #1/0	(1) #6	2"
175Y	(4) #2/0	(1) #6	2"
200Y	(4) #3/0	(1) #6	2"
225Y	(4) #4/0	(1) #4	2-1/2"
250Y	(4) #250 KCMIL	(1) #4	2-1/2"
300Y	(4) #350 KCMIL	(1) #4	3"
350Y	(4) #500 KCMIL	(1) #3	3"
400Y	(4) #600 KCMIL	(1) #3	4"
500Y	(2) SETS OF (4) #250 KCMIL	(1) #2	(2) 2-1/2"
600Y	(2) SETS OF (4) #350 KCMIL	(1) #1	(2) 3"
800Y	(3) SETS OF (4) #300 KCMIL	(1) #1/0	(3) 3"
1000Y	(3) SETS OF (4) #400 KCMIL	(1) #2/0	(3) 3"
1200Y	(4) SETS OF (4) #350 KCMIL	(1) #3/0	(4) 3"
1600Y	(5) SETS OF (4) #400 KCMIL	(1) #4/0	(5) 3"
2000Y	(6) SETS OF (4) #500 KCMIL	(1) #250 KCMIL	(6) 4"
2500Y	(7) SETS OF (4) #500 KCMIL	(1) #350 KCMIL	(7) 4"
3000Y	(8) SETS OF (4) #500 KCMIL	(1) #400 KCMIL	(8) 4"
4000Y	(10) SETS OF (4) #600 KCMIL	(1) #500 KCMIL	(10) 4"
5000Y	(12) SETS OF (4) #600 KCMIL	(1) #700 KCMIL	(12) 4"

DRY-TYPE TRANSFORMER SCHEDULE			
KVA	480V OCPD RATING	208V OCPD RATING	GROUNDING SIZE
15	40A-3P	50A-3P	(1) #6AWG
30	70A-3P	100A-3P	(1) #6AWG
45	100A-3P	150A-3P	(1) #4AWG
75	175A-3P	225A-3P	(1) #2AWG
112.5	225A-3P	400A-3P	(1) #1/0AWG
150	300A-3P	500A-3P	(1) #1/0AWG
225	500A-3P	800A-3P	(1) #2/0AWG
300	800A-3P	1200A-3P	(1) #3/0AWG

TRANSFORMER SCHEDULE NOTES

1. PROVIDE SECONDARY CIRCUIT BREAKER IN NEMA 1 ENCLOSURE AT TRANSFORMER, EXCEPT, IF PANEL IS LESS THAN 10 FEET FROM TRANSFORMER, PROVIDE THE SECONDARY BREAKER AS A MAIN IN THE PANELBOARD.
2. DRY TYPE TRANSFORMER SECONDARIES SHALL BE GROUNDED TO BUILDING STEEL & PER NFPA 70 AS A SEPARATELY DERIVED SOURCE.

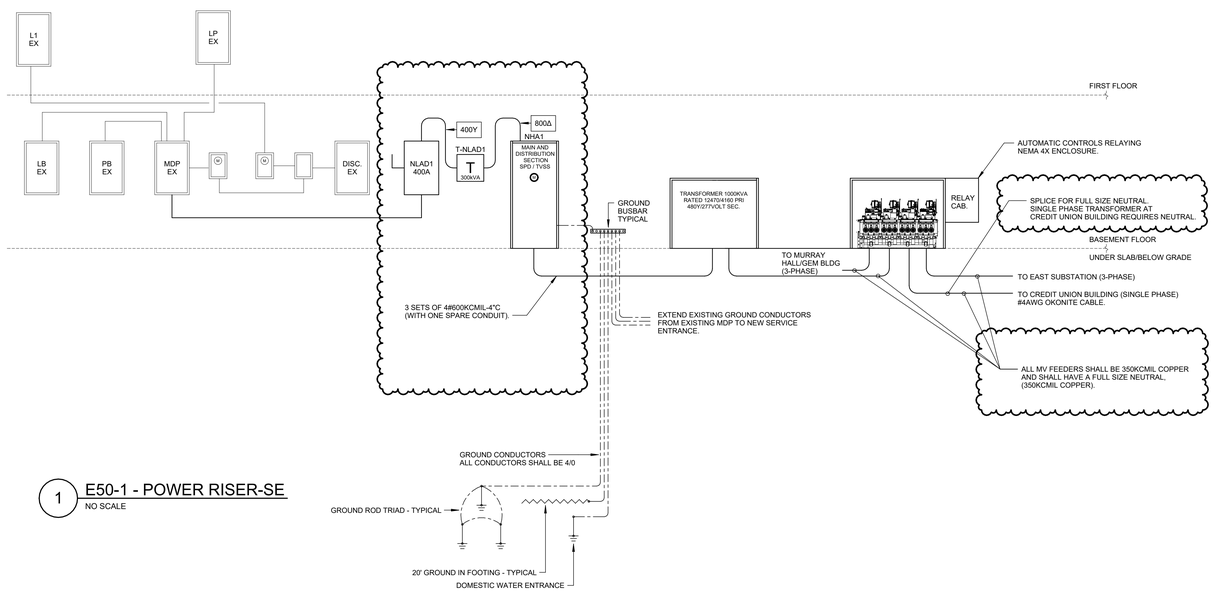

1 E50-1 - POWER RISER-SE
NO SCALE

Harriman

UNIVERSITY OF MAINE
KEYO BUILDING
ELECTRICAL SERVICE
UPGRADE

ORONO, MAINE

Harriman Project No.	24265

Graphic Scale
0" 1"
(scale measures 1" when plotted at full size)

STATE OF MAINE
CHELSEA L. HADSEL
No. 17097
LICENSED PROFESSIONAL ENGINEER

CONSTRUCTION DOCUMENTS

JANUARY 5, 2026

Revision Date	Revision Description
02-03-2026	ADDENDUM 1

Drawn by: PRA

DIAGRAMS

E50-1

GENERAL NOTES

1. ENCASE PRIMARY CONDUITS IN CONCRETE.
2. ENCASE SECONDARY CONDUITS IN CONCRETE.
3. COORDINATE ALL SHUTDOWNS WITH UNIVERSITY. PROVIDE TEMPORAY POWER FOR GEM BUILDING DURING ALL POWER OUTAGES.
4. PROVIDE PORTABLE GENERATOR TO SUPPLY POWER FOR ANY INTERRUPTIONS IN SEVICE TO THE BUILDING. OUTSIDE WORK SHALL BE COORDINATED WITH MANHOLE AND SPLICE WORK IN PARKING LOT FOR MURRARY/TEMP GEM FEED. (MURRARY/TEMP GEM FEED SHALL BE COMPLETED FIRST.)

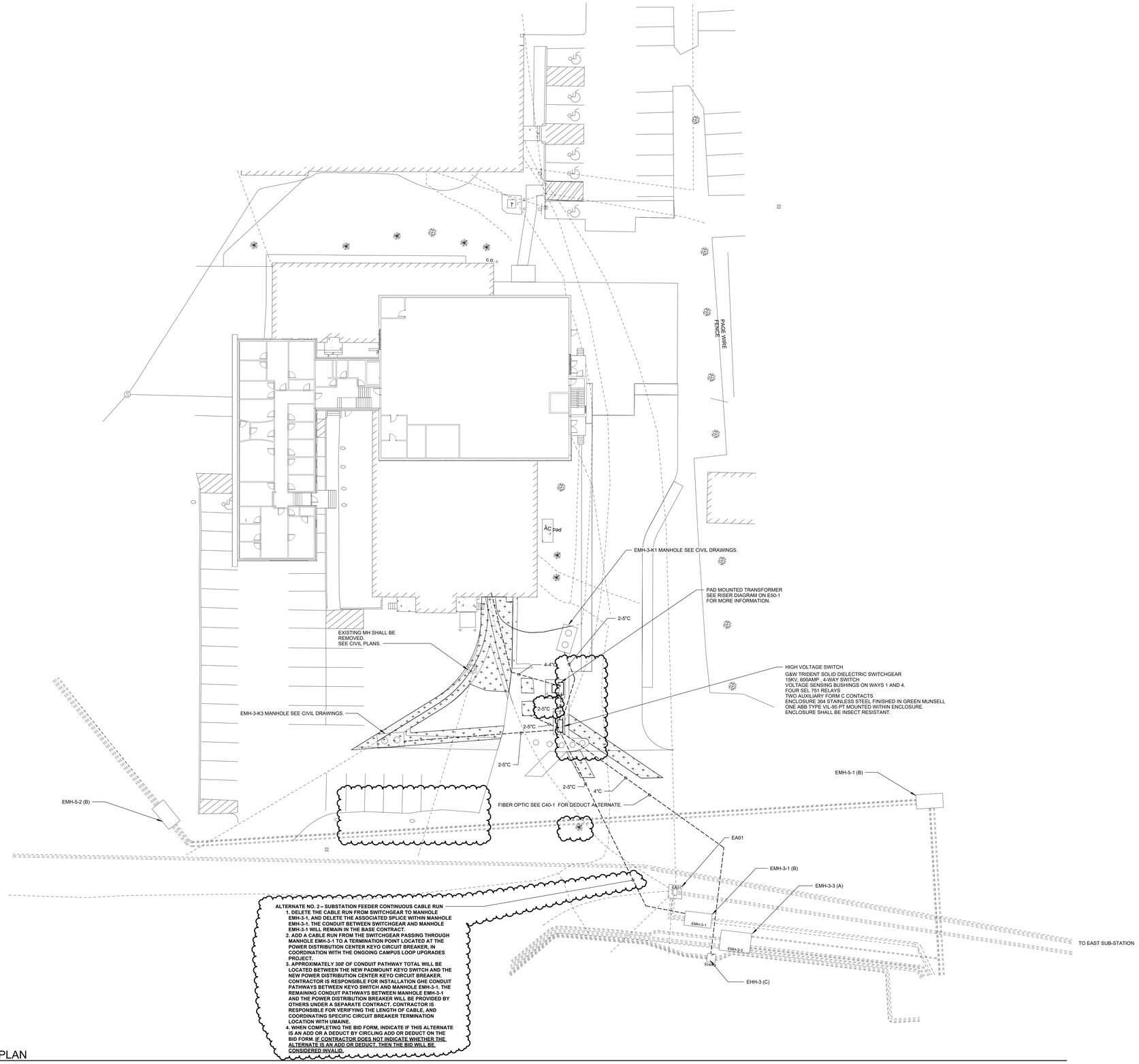

1 SITE PLAN
SCALE: 1" = 20'-0"

Harriman

UNIVERSITY OF MAINE
KEYO BUILDING
ELECTRICAL SERVICE
UPGRADE

ORONO, MAINE

Harriman Project No.	24265

Graphic Scale
0" 1"
(scale measures 1" when plotted at full size)

STATE OF MAINE
CHELSEA L. HADSEL
No. 17097
LICENSED
PROFESSIONAL ENGINEER

CONSTRUCTION DOCUMENTS

JANUARY 5, 2026

Revision Date	Revision Description
02-03-2026	ADDENDUM 1

Drawn by: PRA

SITE PLAN

E80-1